Part no. 33.03.126

www.janitza.com

Power Quality Analyser

UMG 605-PRO

User manual and technical data

2017-09-19

Doc. no. 1.038.027.1.b

Janitza electronics GmbH
Vor dem Polstück 6
D-35633 Lahnau
Support tel. +49 6441 9642-22
Fax +49 64 41 9642-30
e-mail: info@janitza.com
Internet: http://www.janitza.com

Janitza®

1. Contents

1.	**General**	**1**
1. 1	Disclaimer	1
1. 2	Copyright notice	1
1. 3	Technical changes	1
1. 4	Declaration of conformity	1
1. 5	Comments on the manual	1
1. 6	Meaning of symbols	1
2.	**Safety**	**3**
2. 1	Safety information	3
2. 2	Safety measures	3
2. 3	Qualified staff	4
3.	**Proper use**	**5**
3. 1	Inspection on receipt	5
3. 2	Scope of delivery	6
3. 3	Available accessories	6
4.	**Product description**	**7**
4. 1	Measuring process	7
4. 2	Network failure detection	7
4. 3	Usage concept	7
4. 4	GridVis® network analysis software	7
4. 5	Features	8
4. 6	Product overview	9
4. 7	Installation location	10
5.	**Network systems**	**11**
5. 1	Three-phase 4-conductor systems	12
5. 2	Three-phase 3-conductor systems	12
5. 3	Rated voltages	13

6. Installation 15

6. 1 Disconnectors 15
6. 2 Supply voltage 15
6. 3 Measured voltage 16
6. 4 Frequency measurement 16
6. 5 Current measurement 17
6. 5. 1 Ammeter 18
6. 5. 3 Direct measurement 18
6. 5. 2 Total current measurement 18
6. 5. 4 Current direction 18
6. 6 Connection variants 19
6. 6. 1 Baseline measurement, inputs 1-3 19
6. 6. 2 Supporting measurement, input V4 21
6. 7 Temperature measurement 22

7. Interfaces 23

7. 1 Shielding 23
7. 2 RS232 24
7. 3 RS485 24
7. 3. 2 Cable type 25
7. 3. 1 Termination resistors 25
7. 4 Bus structure 26
7. 5 Profibus 27
7. 5. 1 Connection of the bus wiring 27

8. Digital inputs and outputs 29

8. 1 Digital inputs 29
8. 2 S0 pulse input 30
8. 3 Digital outputs 31

9. Commissioning 33

9. 1 Connecting the supply voltage 33
9. 2 Frequency measurement 33
9. 3 Connecting the measured voltage 33
9. 4 Phase sequence 33
9. 5 Applying the measured current 34
9. 6 Checking the power measurement 34

10. Operation 35

10. 1 Button functions 35
10. 2 Display mode 35
10. 3 Programming mode 36
10. 4 Display password 36
10. 5 Homepage password 36

11. Configuration 37

11. 1 Measurement 37
11. 1. 1 Baseline measurement (measurement channels 1-3) 37
11. 1. 2 Supporting measurement (measurement channel 4) 37
11. 3 Voltage transformer ratio 38
11. 2 Current transformer ratio 38
11. 4 RS232 configuration 39
11. 5 RS485 configuration 39
11. 6 Ethernet configuration 40
11. 7 Profibus configuration 41
11. 7. 1 Profiles 41
11. 7. 2 Device master file 41
11. 7. 3 Pre-set profiles 42
11. 8 Recording configuration 45

12. System information 47

12. 1 Measurement range exceeded 47
12. 4 Serial number 47
12. 5 Date 47
12. 2 Firmware release 47
12. 3 Time 47

13. Device homepage 49

13. 1 Measured values 50
13. 1. 1 Short overview 50
13. 1. 2 Detailed measured values 51
13. 1. 3 Diagrams 52
13. 1. 4 Events 52
13. 1. 5 Transients 53
13. 2 Power quality 54
13. 3 Apps 55
13. 3. 1 Push Service 55
13. 4 Information 56
13. 4. 1 Device information 56
13. 4. 2 Downloads 56
13. 4. 3 Display 56

14. Service and maintenance 57

14. 1 Repair and calibration 57
14. 2 Front film 57
14. 3 Disposal 57
14. 4 Service 57
14. 5 Battery 57
14. 6 Firmware update 57

15. Procedure in the event of faults 59

16. Technical data 61

16. 1 General 61
16. 2 Environmental conditions 61
16. 3 Transport and storage 61
16. 4 Supply voltage 62
16. 5 Protection class 62
16. 6 Digital inputs and outputs 63
16. 7 Temperature measurement input 64
16. 8 Interfaces 65
16. 9 Voltage measurement inputs 66
16. 10 Current measurement inputs 66
16. 11 Function parameters 67
16. 11. 1
Measurement in the frequency range 50/60 Hz 67
16. 11. 2
Measurement in the frequency range of 15 to 440 Hz 68
16. 12 Specifications per IEC 61000-4-30 class S 69

17. Parameter list 71

18. Measured value indications 75

19. Dimension diagrams 77

19. 1 Front view 77
19. 2 Side view 78

20. Connection example 79

21. Short introduction (setting primary current) 81

1. General

1. 1 Disclaimer

Observing the information products for the devices is the prerequisite for safe operation and in order to obtain the specified performance and product features. Janitza electronics GmbH accepts no liability for injuries to personnel, property damage or financial losses arising due to a failure to comply with the information products. Ensure that your information products are accessible and legible.

1. 2 Copyright notice

© 2017 - Janitza electronics GmbH - Lahnau. All rights reserved.
Duplication, editing, dissemination and other utilisation, also in part, is prohibited.
All trademarks and the resulting rights are the property of their respective owners.

1. 3 Technical changes

- Please ensure that your device complies with the installation manual.
- Please read and understand the documents enclosed with the product first.
- Keep the documents enclosed with the product available throughout the entire service life of the product and pass them on to subsequent users if applicable.
- Inform yourself of any new device versions and the associated updates to the documentation enclosed with the product at www.janitza.de.

1. 4 Declaration of conformity

For information on the laws, standards and directives that Janitza electronics GmbH has applied for the device, see the declaration of conformity on www.janitza.de.

1. 5 Comments on the manual

We welcome your comments. If anything in this manual seems unclear, please let us know by sending us an **e-mail** to:
info@janitza.de

1. 6 Meaning of symbols

This manual uses the following pictograms:

Ground wire connection.

Inductive.
The current lags behind the voltage.

Capacitive.
The voltage lags behind the current.

2. Safety

Please read this operating manual and all other publications that must be consulted to work with this product.

Observe all safety instructions and warnings. Failure to comply with the instructions can result in personal injuries and/or damage to the product.

Any unauthorised changes or use of this device, which go beyond the mechanical, electrical or otherwise stated operating limitations, can result in bodily injury and/or damage to the product.

Any such unauthorised change constitutes "misuse" and/or "negligence" according to the warranty for the product and thus excludes the warranty for covering possible damage resulting from this.

The user manual:

- must be read before using the device.
- must be kept throughout the entire service life of the product and be readily available for reference.

Follow additional legal and safety regulations required for the respective application when using the device.

2. 1 Safety information

Symbols used:

	This symbol is used as an addition to the safety instructions and warns of an electrical hazard.
	This symbol with the word note describes: • Procedures that do not pose any risk of injures. • Important information, procedures or handling steps.

Safety information is highlighted by a warning triangle and is indicated as follows depending on the degree of danger:

DANGER!	Indicates an imminent danger that causes severe or fatal injuries.
WARNING!	Indicates a potentially hazardous situation that can cause severe injuries or death.
CAUTION!	Indicates a potentially hazardous situation that can cause minor injuries or damage to property.

2. 2 Safety measures

When operating electrical devices, certain parts of these devices are invariably subjected to hazardous voltage. Therefore, severe bodily injuries or damage to property can occur if they are not handled properly.

WARNING! **Risk of injury due to electric voltage!**

Severe bodily injuries or death can occur due to dangerous voltages.
Therefore, note the following:

- **Before connecting connections, earth the device at the ground wire connection if present.**
- **Hazardous voltages may be present in all switching parts that are connected to the power supply.**
- **Hazardous voltages may also be present in the device even after disconnecting the supply voltage.**
- **Provide single core conductors with sleeves.**
- **Only connect screw-type terminals with a matching number of pins and of the same type.**
- **De-energise the system before starting work.**

2. 3 Qualified staff

This device must only be operated and repaired by specialised personnel.

Specialised personnel are people who are qualified to recognise risks and prevent potential dangers that can be caused by the operation or maintenance of the device based on their respective training and experience.

WARNING! If the device is not operated according to the user manual, protection is no longer ensured and hazards can be posed by the device.

3. Proper use

3. 1 Inspection on receipt

The prerequisites of faultless, safe operation of this device are proper transport and proper storage, set-up and installation, as well as careful operation and maintenance.

Packing and unpacking must be carried out with customary care without the use of force and only using suitable tools. The devices should be visually checked for flawless mechanical condition.

Please check the delivered items for completeness before you start installing the device.

If it can be assumed that risk-free operation is no longer possible, the device must be immediately put out of operation and secured against being put back into operation again. It can be assumed that risk-free operation is no longer possible if the device, for example:

- has visible damage,
- no longer works despite the mains power supply being intact,
- has been exposed to prolonged adverse conditions (e.g. storage outside the permissible climate limits without being adapted to the room climate, condensation, etc.) or rough handling during transportation (e.g. falling from a height, even if there is no visible external damage, etc.)

NOTE!
All screw-type terminals included in the scope of delivery are attached to the device.

NOTE!
The installation and commissioning manual also describes options that are not supplied as standard.

NOTE!
All supplied options and versions are described on the delivery note.

3. 2 Scope of delivery

Number	Part no.	Designation
1	52.16.xxx [1]	UMG 605-PRO
1	33.03.337	Installation manual
1	33.03.351	“GridVis software” quick guide
1	10.01.807	Screw-type terminal, pluggable, 2-pin
1	10.01.808	Screw-type terminal, pluggable, 3-pin
1	10.01.809	Screw-type terminal, pluggable, 5-pin
1	10.01.810	Screw-type terminal, pluggable, 6
1	89.10.051	Slotted screwdriver (0.40 x 2 mm), ESD
1	08.01.505	2m patch cable, twisted, grey (UMG PC/switch connection)
1	52.00.008	RS485 termination resistor, 120 ohms

[1] For the item number, see the delivery note

3. 3 Available accessories

	Part no.	Designation
	21.01.058	CR2032 lithium battery, 3 V (approval according to UL 1642)
	08.02.427	RS232, connection cable (UMG604-PRO - PC), 2 m, 5-pin

4. Product description

The device is intended for:

- measuring power quality according to EN61000-4-30 in building installations, on distribution units, circuit breakers and busbar trunking systems.
- measuring measured voltages and currents that derive from the same network.
- measurements in low voltage networks where rated voltages of up to 300 V and surge voltages of overvoltage category III can occur.
- installation in fixed switching cabinets or small installation distributors. It can be installed in any position.
- current measurement, for which it is provided with external ../1 A or ../5 A current transformers.
- use in 2, 3 and 4-conductor networks and in TN and TT networks.
- measurements in medium and high-voltage networks via current and voltage transformers only.

The measurement results can be displayed, read out and further processed via the device's interfaces.

4. 1 Measuring process

The device measures continuously and calculates all effective values over a 200 ms interval.

The device measures the real effective value (TRMS) of the voltages and currents connected to the measurement inputs.

4. 2 Network failure detection

Network failure detection is carried out via the voltage measurement inputs. The selection of voltage measurement inputs can be configured using the GridVis® software.

The device bridges the following network failures on the auxiliary voltage input:

- Supply voltage: 230 V AC
- Bridging time: max. 80 ms

4. 3 Usage concept

You can program and call up the measured values via many routes using the device:

- **Directly** on the device via 2 buttons and the display
- Using the **GridVis® programming software**
- Using the **device homepage**
- Using the **Modbus protocol**. You can modify and call up the data using the Modbus address list. The list can be called up from www.janitza.de.

This user manual only describes how to operate the device using the 2 buttons. The GridVis® programming software has its own "online help" system.

> **NOTE!**
> Use the parameter list from “17. Parameter list” for configuration on the device and use the Modbus address list on **www.janitza.de** for configuration via a serial interface

4. 4 GridVis® network analysis software

You can use the GridVis® network analysis software that is available at www.janitza.de to program the device and read out data. To do this, a PC must be connected to the device via a serial interface (RS485/ Ethernet).

You can use the GridVis® network analysis software to:

- program the device.
- configure and read out recordings.
- save the data to a database.
- display measured values graphically.
- program customer-specific applications.

4. 5 Features

General

- Installation on a 35 mm DIN rail
- LCD display and operation via 2 buttons
- 4 voltage and 4 current measurement inputs
- 1 temperature measurement input
- 2 digital outputs and 2 digital inputs
- RS485 interface (Modbus RTU, Modbus master, BACnet (**optional**))
- RS232 interface (Modbus slave)
- Profibus DP/V0
- Ethernet (web server, e-mail, BACnet (**optional**))
- Suitable for installation in installation distributors
- Working temperature range -10 °C to +55 °C
- Analysis and evaluation in accordance with DIN EN50160 with the GridVis® programming software that is supplied as standard
- Data logger / event store (128 MB flash drive)
- Capture events such as overvoltages, voltage dips, network failures and overcurrent

Measurement

- Measurement of the power quality in accordance with DIN EN61000-4-30:2009 class S
- Measurement in IT, TN and TT networks
- Measurement of the harmonics and interharmonics (Uln, Ull, I) in accordance with DIN EN61000-4-7
- Flicker measurement in accordance with DIN EN61000-4-15:2011 Class F3
- Measurement of ripple control signals (U, I, P, Q)
- Continuous sampling of the voltage and current measurement inputs
- Capture transients >50 µs and store up to 16,000 sampling points
- Capturing more than 2400 measured values per measurement cycle (200 ms)
- Fourier analysis 1st to 63rd Harmonics for Ull, Uln, I, P (consumption/delivery) and Q (ind./capacitive)
- Temperature measurement
- Active energy; measurement uncertainty in accordance with DIN EN62053-22, class 0.5 S for ../5A converter
- Reactive energy; measurement uncertainty in accordance with DIN EN62053-23, class 2
- Programming separate applications in Jasic

4. 6 Product overview

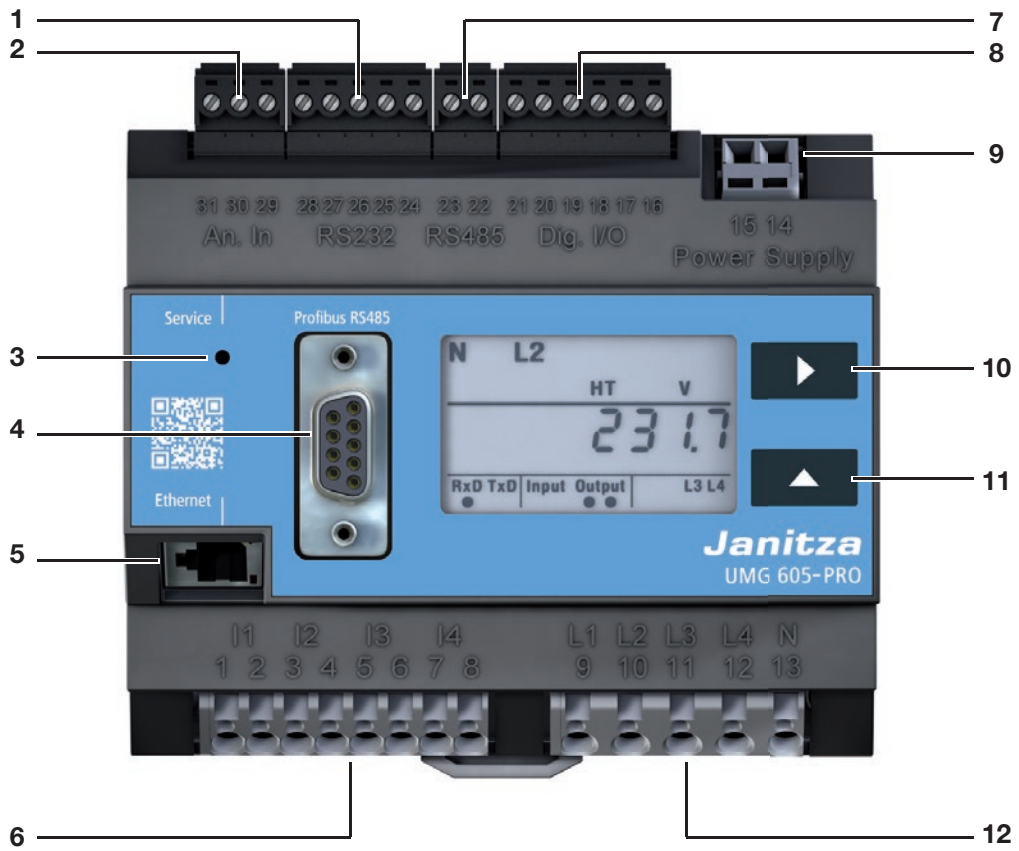

Fig. Front view of UMG605-PRO

1	RS232 interface
2	Temperature measurement input
3	Hidden service button
4	Profibus interface
5	Ethernet interface
6	Current measurement inputs I1 to I4
7	RS485 interface
8	Digital inputs / outputs
9	Supply voltage
10	Button 1
11	Button 2
12	Voltage measurement inputs L1 to L4

4. 7 Installation location

The device can be installed in switching cabinets or in small installation distributors in accordance with DIN 43880
.

It is assembled on a 35 mm mounting rail in accordance with DIN EN 60715. It can be installed in any position.

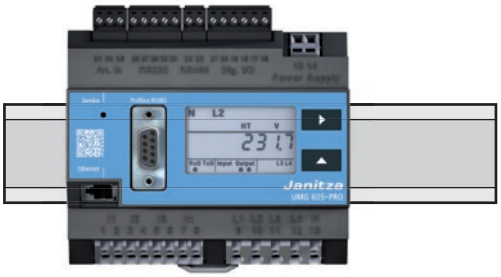

Fig. Front view of UMG 605-PRO on mounting rail

5. Network systems

Suitable network systems and maximum rated voltages (DIN EN 61010-1/A1):

Three-phase four-conductor systems with earthed neutral conductor	**Three-phase four-conductor systems** with non-earthed neutral conductor (IT networks)	**Three-phase three-conductor systems** not earthed	**Three-phase three-conductor systems** with earthed phase
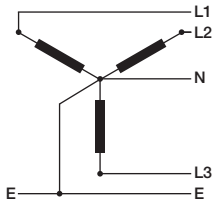	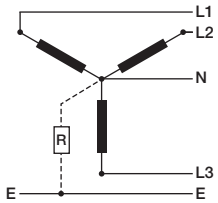	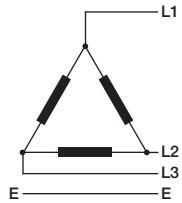	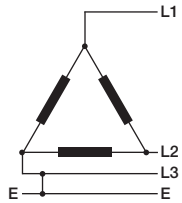
U_{L-N} / U_{L-L} 277 VLN / 480 VLL	U_{L-N} / U_{L-L} 277 VLN / 480 VLL	U_{L-L} 480 VLL	U_{L-L} 480 VLL

Dual-phase two-conductor systems not earthed	**Single-phase two-conductor systems** with earthed neutral conductor	**Separated single-phase three-conductor system** with earthed neutral conductor
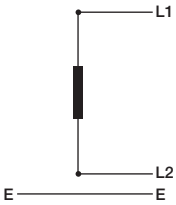	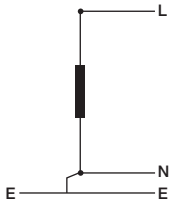	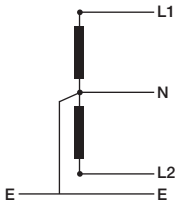
U_{L-L} 480 VLL	U_{L-N} 480 VLN	U_{L-N} / U_{L-L} 277 VLN / 480 VLL

The device can be used:

- in 2-, 3- and 4-conductor networks (TN, TT and IT networks).
- in domestic and industrial settings.

WARNING!

Risk of injury due to electric voltage!

If the device is subjected to measurement voltage surges higher than the permissible overvoltage category, safety-relevant insulations in the device can be damaged, which means that the product's safety can no longer be guaranteed.
Only use the device in environments in which the permissible measurement voltage surge is not exceeded.

5. 1 Three-phase 4-conductor systems

The device can be used in three-phase 4-conductor systems (TN, TT networks) (50 Hz, 60 Hz) with an earthed neutral conductor. The bodies of the electrical system are earthed.
The voltage between phase and neutral conductor may be a maximum of 300 V AC.

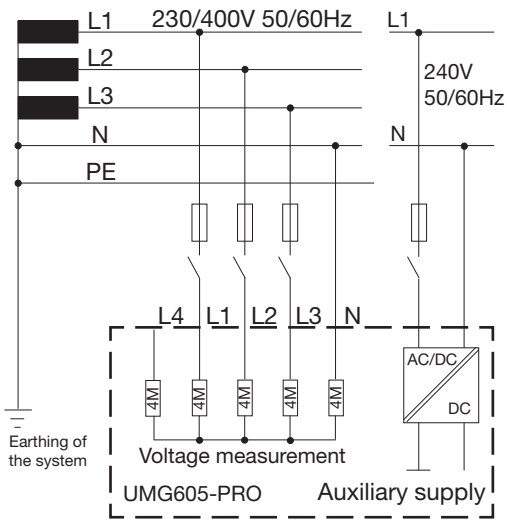

Fig. Schematic diagram, UMG 605-PRO in a TN network

5. 2 Three-phase 3-conductor systems

The device can be used in non-earthed three-phase 3-conductor systems (IT network).

The voltage between phase and phase may be a maximum of 480 V AC (50 Hz, 60 Hz).

The IT network is not earthed at the neutral point of the voltage generator. The bodies of the electrical system are earthed. Earthing via a high ohm impedance is permitted.

IT networks are only permitted in certain systems with their own transformers or generators.

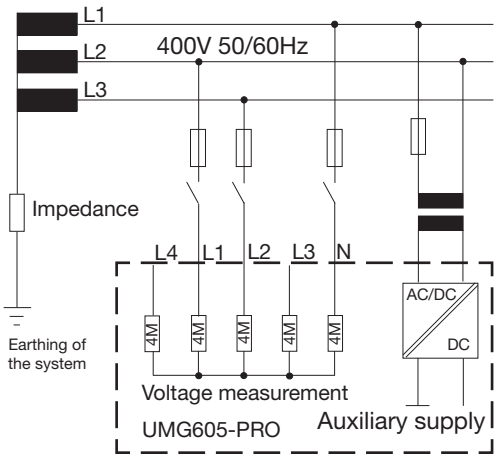

Fig. Schematic diagram, UMG 605-PRO in an IT network without N.

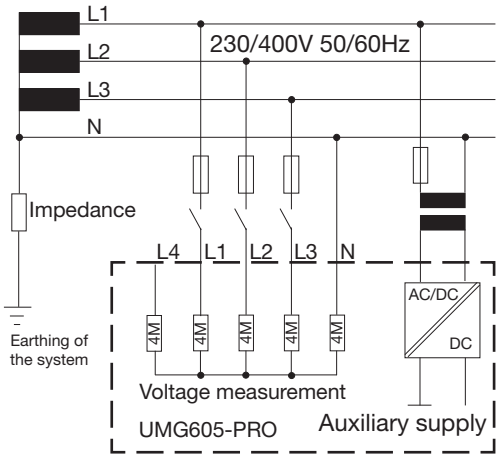

Fig. Schematic diagram, UMG 605-PRO in an IT network with N

5. 3 Rated voltages

The following illustrations show lists of networks and the corresponding rated network voltages in which the device can be used.

U_{L-N} / U_{L-L}
66 V / 115 V
120 V / 208 V
127 V / 220 V
220 V / 380 V
230 V / 400 V
240 V / 415 V
260 V / 440 V
277 V /480 V

Fig. Table of suitable rated voltages in a three-phase 4-conductor network

U_{L-L}
66V
115V
120V
127V
200V
230V
240V
260V
277V
347V
380V
400V
415V
440V
480V

Fig. Table of suitable rated voltages in a three-phase 3-conductor network

6. Installation

6. 1 Disconnectors

During building installation, provide a suitable disconnector in order to disconnect the device from the current and voltage.

- Install the disconnector close to the device so that it is easily accessible to the user.
- Label the switch as a disconnection device for this device.

6. 2 Supply voltage

The device requires supply voltage to operate.

Before connecting the supply voltage, ensure that the voltage and frequency correspond to the details on the rating plate!

The connection lines for the supply voltage must be protected using a UL-listed fuse or a circuit breaker.

CAUTION! **Damage to property due to not observing the connection conditions**

Failure to observe the connection conditions can damage or destroy your device.
Therefore, note the following:
- **Adhere to the specifications for voltage and frequency on the rating plate.**
- **Connect the supply voltage via a fuse in accordance with the technical data.**
- **Do not connect the supply voltage to the voltage transformers.**

WARNING! **Risk of injury due to electric voltage!**

Severe bodily injuries or death can occur due to
- touching bare or stripped wires that are live,
- device inputs that are dangerous to touch.

Therefore, note the following:
- **De-energise your system before starting the work!**
- **The inputs for the supply voltage are hazardous if touched!**

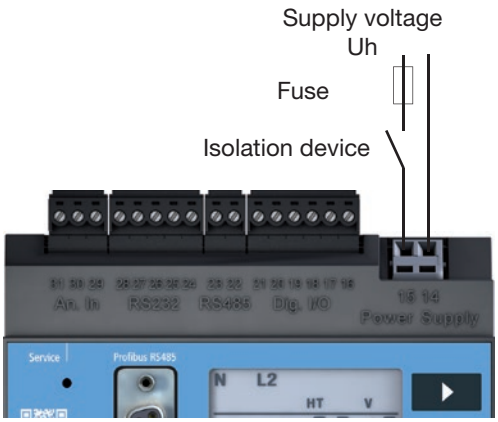

Fig. Example connection for the supply voltage Uh.

NOTE!
Devices that can be operated with DC voltage are protected against polarity reversal.

6. 3 Measured voltage

The device is designed to measure AC voltage in 300 V networks, in which overvoltages of category III can occur.

The device can only determine measured values if measured voltage of >10 Veff is present on at least one voltage measurement input.

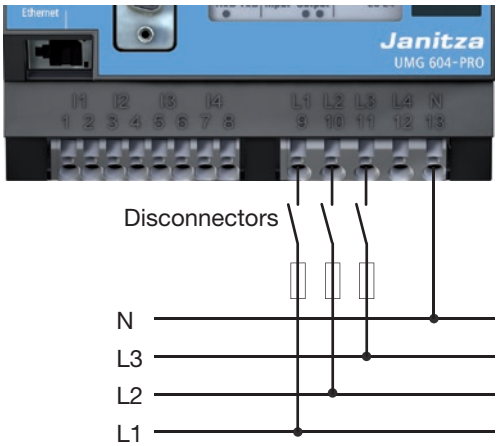

Fig.23.1 Connection example: Voltage measurement via short circuit-proof measurement wires

Note the following when selecting the measurement wires:

- Use measurement wires that are suitable for 300 V to earth and 520 V conductor to conductor.
- Fuse the normal measurement wires using an overcurrent protection device.
- Route normal short circuit-proof measurement wires via a disconnector.

6. 4 Frequency measurement

The device is suitable for measurements in networks in which the fundamental oscillation of the voltage is in the range of 15 to 440 Hz.

In order to determine the mains frequency automatically, a voltage L1-N of greater than 10 Veff must be applied to voltage input V1.

The mains frequency is only measured on the measurement inputs of the baseline measurement (V1, V2, V3).

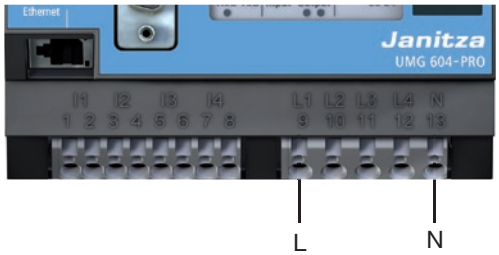

Fig. Voltage measurement input with connected phase L and neutral conductor N

CAUTION! **Malfunction due to incorrect connection**

If the device is connected incorrectly, incorrect measured values may be returned.
Therefore, note the following:

- **Measured voltages and currents must derive from the same network.**
- **The device is not suitable for measuring DC voltage.**

WARNING! **Risk of injury due to electric voltage!**

Severe bodily injuries or death can occur due to a failure to observe the connection conditions for the voltage measurement inputs.
Therefore, note the following:

- **Do not use the device for voltage measurement in SELV circuits.**
- **Connect the voltages higher than the#permitted network rated voltages using voltage transformers.**
- **The voltage measurement inputs on the device are dangerous if touched!**
- **Also install a disconnector for the measured voltage as described in “6. 1 Disconnectors”.**

6. 5 Current measurement

The device:

- is intended for connecting current transformers with secondary currents of ../1 A and ../5 A.
- does not measure DC.
- has current measurement inputs that are continuously loaded with 6 A or loaded with 100 A for 1 second.

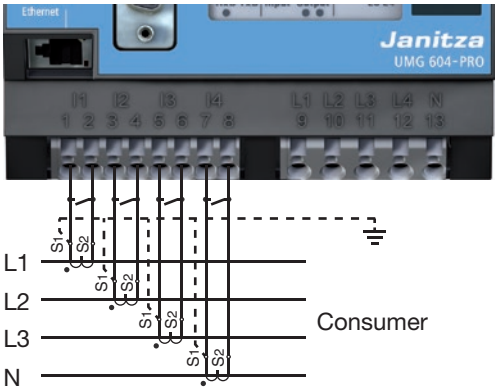

Fig. Current measurement via current transformers connection example.

WARNING!

Risk of injury due to electric voltage on current transformers!

On current transformers that are operated open on the secondary side, high voltage peaks that are dangerous to touch can occur, which can cause severe bodily injuries or death.

Therefore, note the following:

- **Avoid operating the current transformers open.**
- **Short circuit all unloaded current transformers.**
- **Connect the earthing connections provided on the current transformer to the earth.**
- **You must short circuit the secondary connections on the current transformer before interrupting the power supply.**
- **If a test switch, which automatically short-circuits the secondary wires of the current transformer is available, it is sufficient to set this to the "Test" position as long as the short-circuiting device has been checked beforehand.**
- **Ensure that the attached screw-type terminal is affixed to the device sufficiently using the two screws.**
- **Safe open-circuit current transformers are also dangerous to touch when they are operated open.**

WARNING!

Risk of injury due to electric voltage!

Current measurement inputs are dangerous to touch.

NOTE!

It is not necessary to configure a connection schematic for measurement inputs L4 and I4.

6. 5. 1 Ammeter

If you wish to measure the current not only with the UMG but rather with an ammeter too, connect the ammeter to the UMG in series.

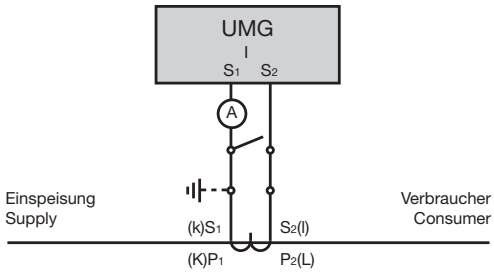

Fig. Circuit diagram with additional ammeter switched in series

6. 5. 3 Direct measurement

Rated currents of up to 5 A can be measured directly on the device. When doing so, note that each current measurement input can be continuously loaded with 6 A or loaded with max. 100 A for 1 second.

The device does not have integrated protection for current measurement. Therefore, provide a 6 A line protection fuse or automatic circuit breaker as protection against overcurrent when installing.

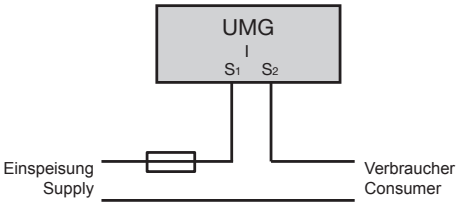

Fig. Example of direct current measurement.

6. 5. 2 Total current measurement

For a summation measurement via two current transformers, first set their total transformation ratio on the device. For information on setting the current transformer ratios, see “11. 2 Current transformer ratio”.

Example:

The current is measured via two current transformers. Both current transformers have a transformation ratio of 1000 / 5 A. The summation measurement is performed using a 5+5 / 5 A total current transformer.

The device must then be set up as follows:

Primary current: 1000 A + 1000 A = 2000 A
Secondary current: 5 A

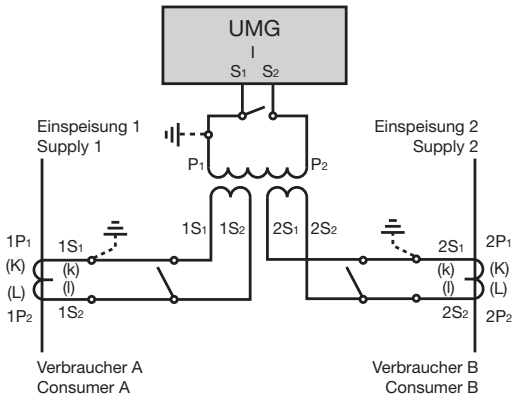

Fig. Example for current measurement via a total current transformer

6. 5. 4 Current direction

You can correct the current direction directly on the device or via the existing serial interfaces for each phase individually.

If incorrectly connected, a subsequent re-connection of the current transformer is not required.

6. 6 Connection variants

6. 6. 1 Baseline measurement, inputs 1-3

Four-conductor connection

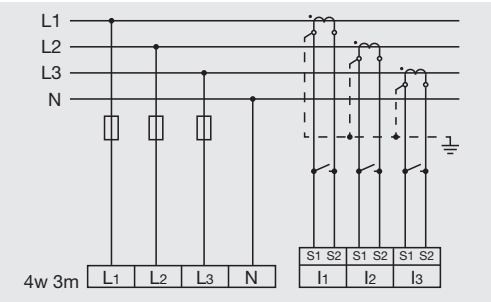

Fig. Measurement in a three-phase 4-conductor network with asymmetric loading.

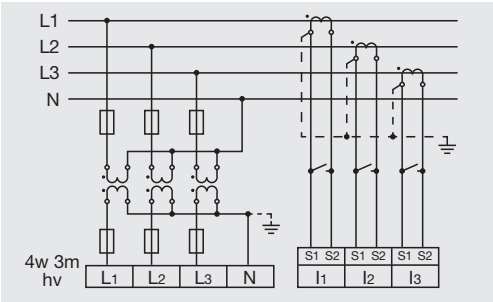

Fig. Measurement via 3 voltage transformers in a three-phase 4-conductor network with asymmetric loading.

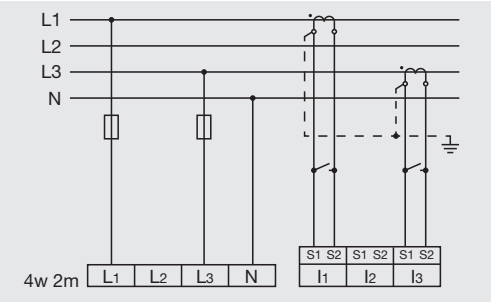

Fig. Measurement in a three-phase 4-conductor network with symmetric loading.

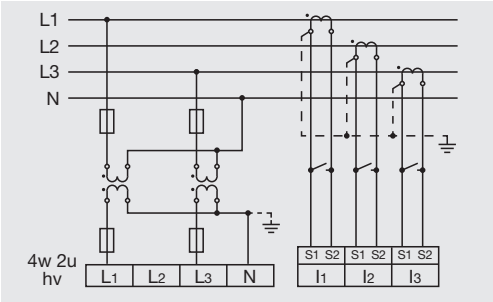

Fig. Measurement via 2 voltage transformers in a three-phase 4-conductor network with asymmetric loading.

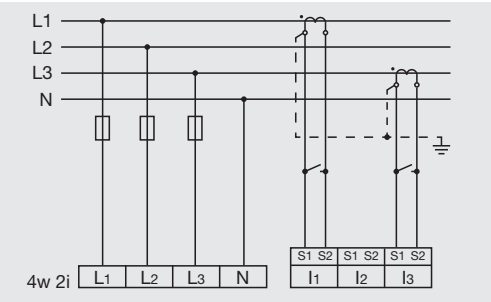

Fig. Measurement via 2 current transformers in a three-phase 3-conductor network with symmetric loading.

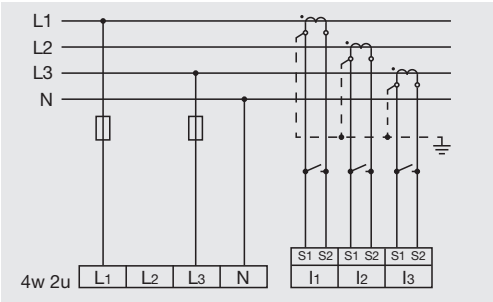

Fig. Measurement in a three-phase 4-conductor network with asymmetric loading.

Three-conductor connection

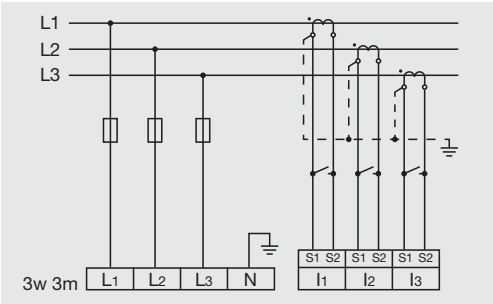

Fig. Measurement in a three-phase 3-conductor network with asymmetric loading.

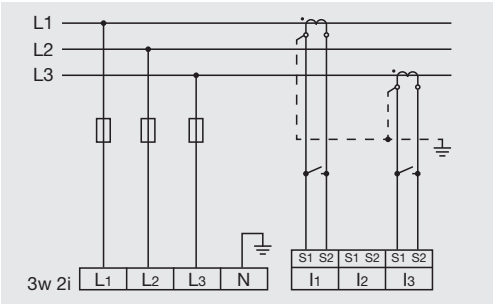

Fig. Measurement in a three-phase 3-conductor network with asymmetric loading.

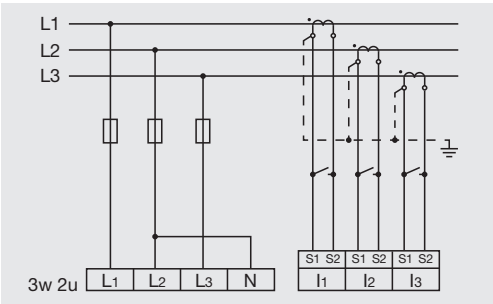

Fig. Measurement in a three-phase 3-conductor network with asymmetric loading.

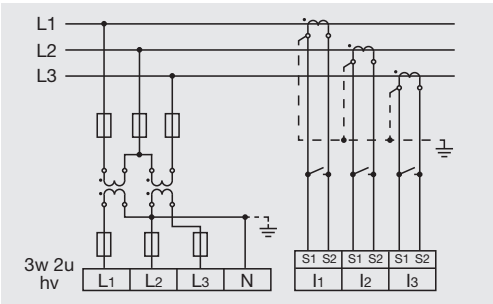

Fig. Measurement in a three-phase 3-conductor network with asymmetric loading.

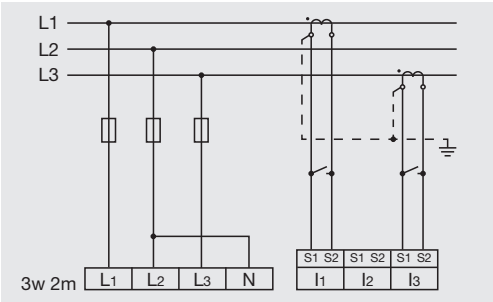

Fig. Measurement in a three-phase 3-conductor network with asymmetric loading.

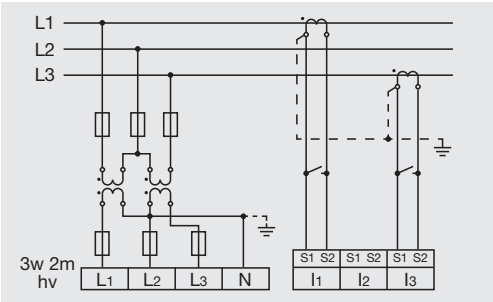

Fig. Measurement in a three-phase 3-conductor network with asymmetric loading.

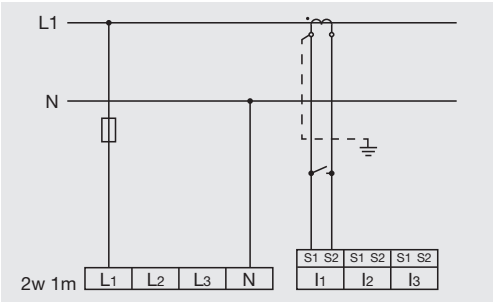

Fig. Measurement of one phase in a three-phase 4-conductor network.

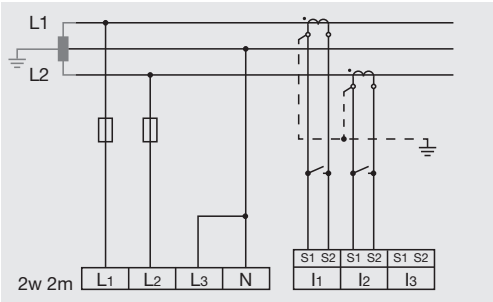

Fig. Measurement in a single-phase 3-conductor network. I3 and U3 are not calculated and set to zero.

6. 6. 2 Supporting measurement, input V4 Three-conductor connection

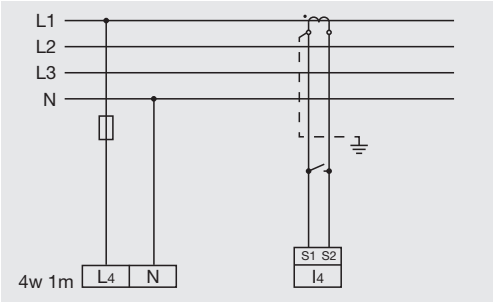

Fig. Measurement via a current transformer in a three-phase 4-conductor network with symmetric loading.

NOTE!
If the baseline measurement (inputs V1-V3) is connected to a three-phase 3-conductor network, the supporting measurement (input V4) can no longer be used as a measurement input.

NOTE!
For measurement with the supporting measurement (V4), a voltage must be connected to the baseline measurement for frequency determination.

NOTE!
Measured voltages and measured currents must derive from the same network.

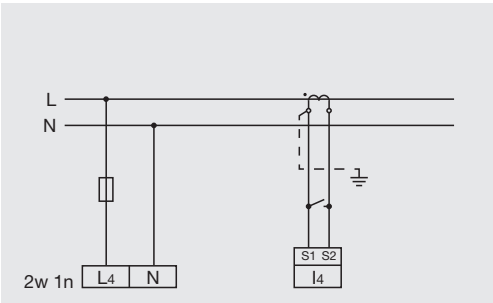

Fig. Measurement via a current transformer.

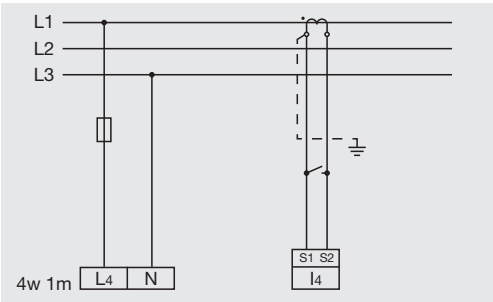

Fig. Measurement via a current transformer in a three-phase 3-conductor network with symmetric loading.

6. 7 Temperature measurement

The device has a temperature measurement input that is designed for a maximum total burden of 4 kOhm.

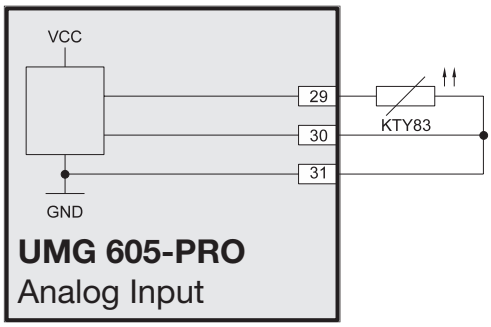

Fig.42.1 Example, temperature measurement with a KTY83.

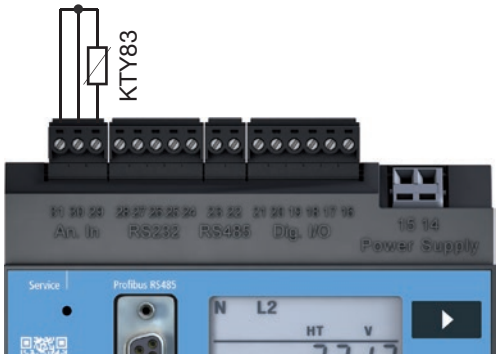

Fig. Connecting temperature sensor to the measurement input

CAUTION!

Transmission errors and damage to property due to electrical faults

If the line is longer than 30 m, there is an increased probability of transmission errors and damage to the device due to atmospheric discharge.
Use a shielded cable to connect to the temperature sensor.

CAUTION!

Risk of injury due to electric voltage!

Insufficient insulation of the operating equipment at the temperature measurement input to the mains supply circuits can cause the temperature measurement input and interfaces RS232 and RS485 to be hazardous to touch.
Ensure that there is reinforced or double insulation to the mains supply circuits!

WARNING!

Risk of injury due to electric voltage!

RS232, RS485 and the temperature measurement input are not galvanically separated from each other.
Therefore, be aware that hazardous voltages on the inputs that are not galvanically separated may have effects on the other connections.

7. Interfaces

The device has the following interfaces:

- RS232
- RS485
- Ethernet
- Profibus

All interfaces can be used simultaneously.

7. 1 Shielding

A twisted, shielded cable should be used for connections via the RS232 and RS485 interfaces.

Earth the shields of all cables that lead to the cabinet and at the cabinet entry.

Connect the screens over a generous area and in a manner that will conduct well, to a low-noise earth.

Gather the cables mechanically above the earthing clamp in order to avoid damage due to cable movements.

Use suitable cable glands to feed the cables into the cabinet, for example, armoured conduit couplings.

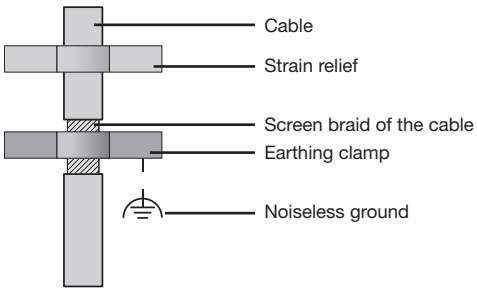

Fig. Shielding procedure at cabinet entry.

WARNING! **Risk of injury due to electric voltage!**

RS232, RS485 and the temperature measurement input are not galvanically separated from each other. The Profibus and Ethernet are functionally insulated from each other and the remaining interfaces. **Therefore, be aware that hazardous voltages on the inputs that are not galvanically separated may have effects on the other connections.**

7. 2 RS232

You can use an RS232 connection cable to connect the device to a PC.

The achievable distance between two devices with RS232 interfaces depends on the cable used and the baud rate.

The maximum cable length that can be connected is 30 m!

As a guideline, if the transmission rate is 9600 Baud, a distance of 15 m to 30 m should not be exceeded.

The permissible ohmic load must be greater than 3 kOhm and the capacitive load caused by the transmission line must be lower than 2500 pF.

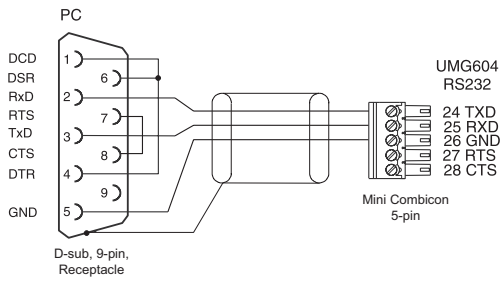

Fig. Plug arrangement for the PC connection cables (item no. 08 02 427).

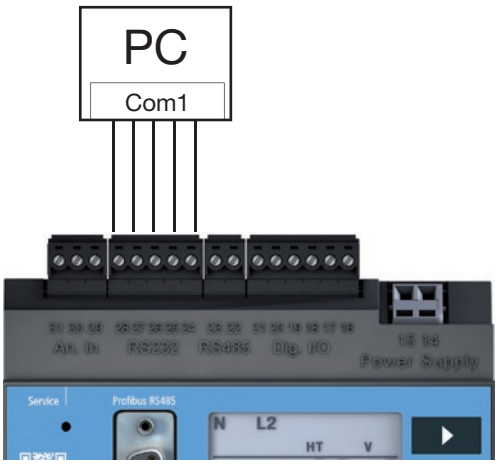

Fig. Example, connecting a UMG605-PRO to a PC via the RS232 interface.

7. 3 RS485

In the UMG605, the RS485 interface is designed as a 2-pin plug contact.

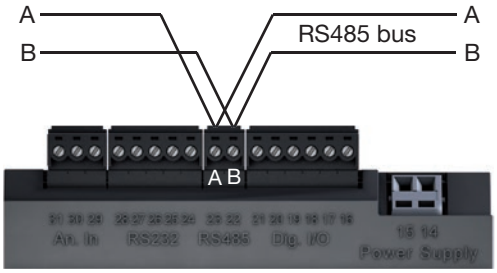

Fig. RS485 interface, 2 pin plug contact

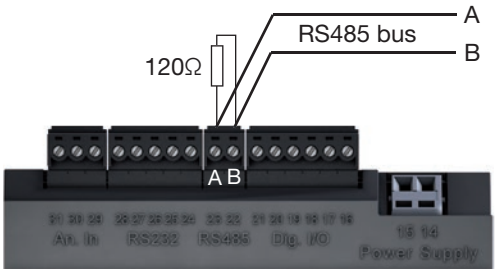

Fig. RS485 interface, 2-pin plug contact with termination resistor (item no. 52.00.008).

7. 3. 2 Cable type

CAT cables are not suitable for bus wiring. Instead, we recommend the following cable types:

- Unitronic Li2YCY(TP) 2x2x0.22 (from Lapp Kabel)
- Unitronic BUS L2/FIP 1x2x0.64 (from Lapp Kabel)

The maximum cable length is 1200 m at a baud rate of 38.4 k.

WARNING! **Risk of injury due to electric voltage!**

Temperatures of up to 80 °C can occur on the connections if there are high measured currents.
Therefore, use lines that are designed for an operating temperature of at least 80 °C

7. 3. 1 Termination resistors

The cable is terminated with resistors (120 Ohm 1/4 W) at the beginning and at the end of a segment.

The UMG605-PRO does not contain **any** termination resistors.

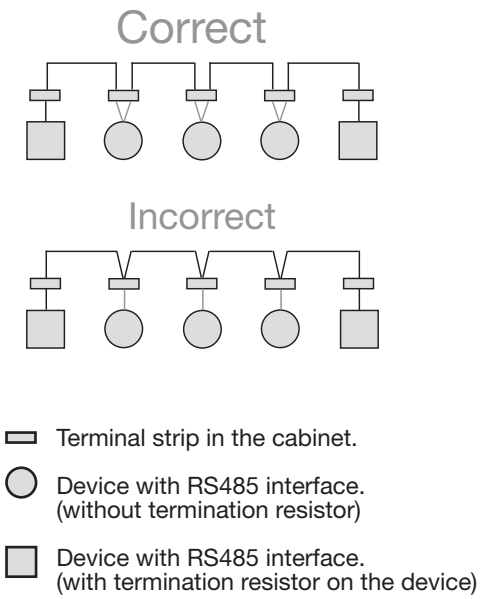

7. 4 Bus structure

- All devices are connected in a bus structure (line).
- Up to 32 participants can be connected together in a single segment.
- The cable is terminated with resistors at the beginning and at the end of a segment.
- If there are more than 32 participants, repeaters (amplifiers) must be used to connect the individual segments.
- Devices for which the bus connection is switched on must be under current.
- It is recommended that the master be placed at the end of a segment.
- If the master is replaced with a bus connection, the bus must be switched off.
- Replacing a slave with a bus connection that is either switched off or de-energised can destabilise the bus.
- Devices that are not connected to the bus can be replaced without destabilising the bus.

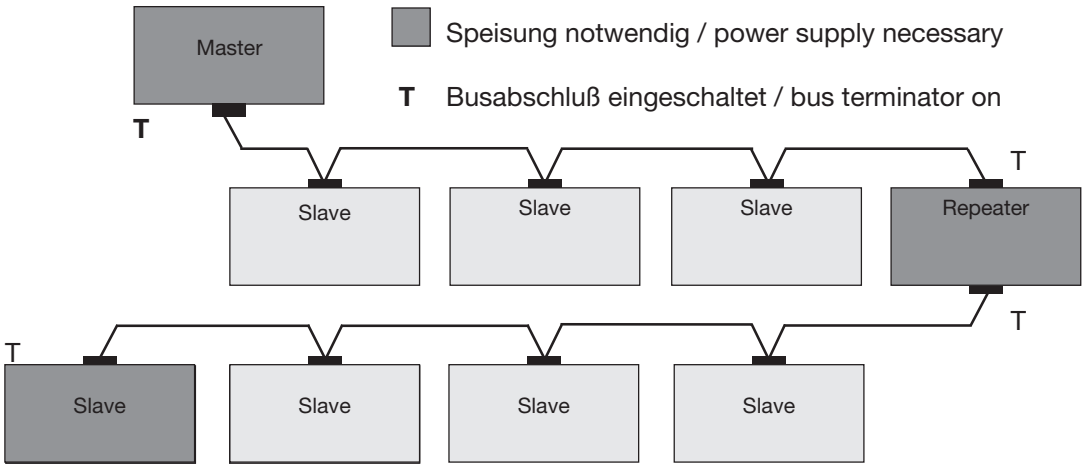

Fig. Bus structure illustration

7. 5 Profibus

The UMG 605-PRO is equipped with a Profibus connection that is designed as a 9-pin DSUB receptacle.

For the connection, we recommend a "SUBCON-Plus-ProfiB/AX/SC" 9-pin Profibus connector from Phoenix.

You can order this from us using Janitza item number 13.10.539.

7. 5. 1 Connection of the bus wiring

The inbound bus wiring is connected to terminals 1A and 1B.

The bus wiring for the next device in line is connected to terminals 2A and 2B.

If there are no subsequent devices in the line, the bus wiring must be terminated with a resistor (switch to ON). With the switch set to ON, terminals 2A and 2B are switched off for further continuing bus wiring.

Fig. UMG605-PRO with Profibus interface.

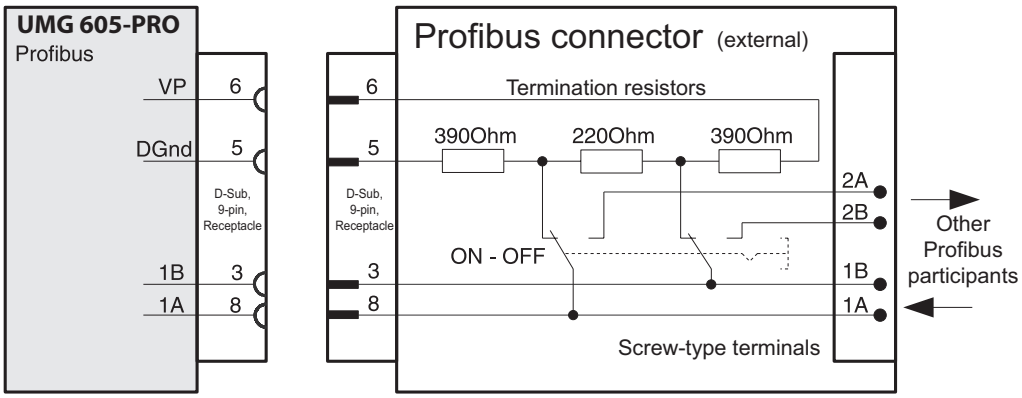

Fig. Profibus connector with termination resistors.

8. Digital inputs and outputs

8. 1 Digital inputs

The device has 2 digital inputs to which you can connect one signal generator each.

An input signal is detected on a digital input if a voltage of at least 10 V and maximum 28 V DC is applied.

The flowing current is at least 1 mA and a maximum of 6 mA.

Pay attention to the supply voltage's polarity!

CAUTION! **Transmission errors and damage to property due to electrical faults**

If the line is longer than 30 m, there is an increased probability of transmission errors and damage to the device due to atmospheric discharge.
Use a shielded cable for connection to the digital inputs.

CAUTION! **Damage to property due to connection errors**

Ensure that:
- the supply voltage is DC voltage.
- the supply voltage has the right polarity.
- the height of the voltage is at least 10 V and a maximum of 28 V.

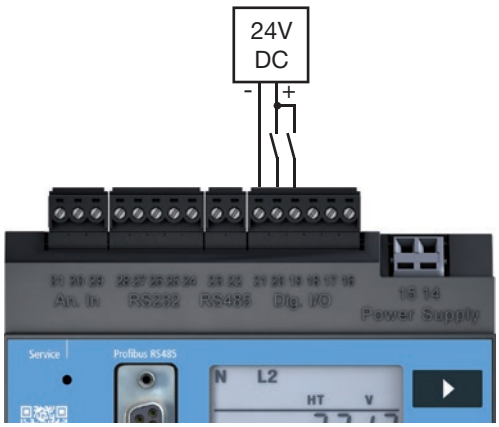

Fig. Connection example of digital inputs.

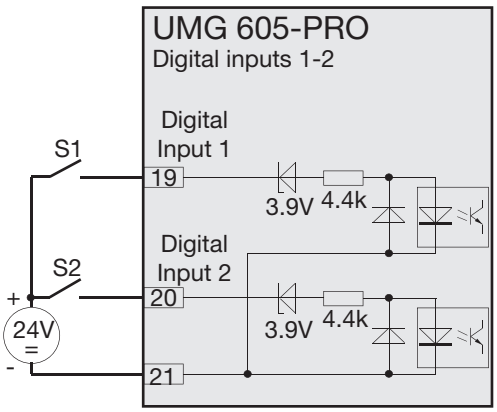

Fig. Example for the connection of external switch contacts S1 and S2 to digital inputs 1 and 2.

8. 2 S0 pulse input

You can also connect S0 pulse transducers per DIN EN62053-31 to each UMG 605-PRO with inputs for 24 V.

You only require external auxiliary voltage of 20 to 28V DC and an external 1.5 kOhm resistor each.

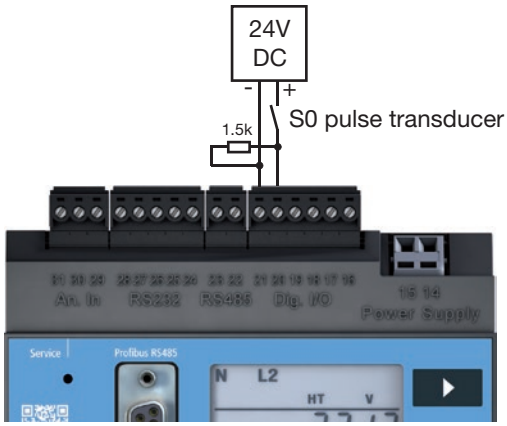

Fig. UMG 605-PRO with inputs for 24V. Example with S0 pulse transducer.

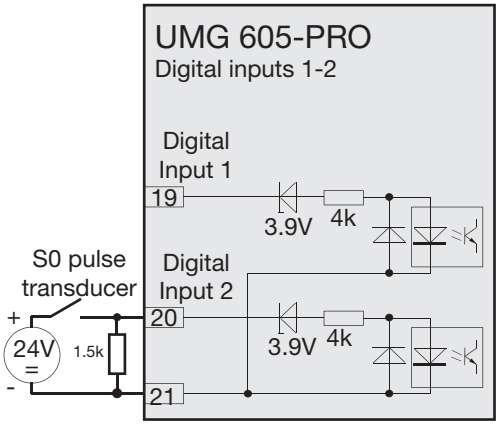

Fig. UMG 605-PRO with inputs for 24V and an S0 pulse transducer on digital input 2.

8. 3 Digital outputs

The device has 2 transistor switching outputs that are galvanically separated from the analysis electronics using opto couplers.

The digital outputs:

- can switch DC or AC loads.
- can switch loads depending on the supply voltage's polarity.

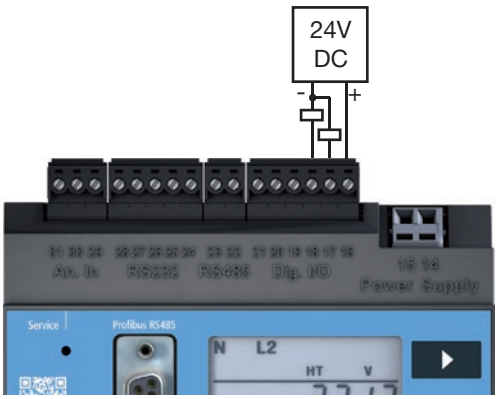

Fig. Connection example of digital outputs.

CAUTION!

Transmission errors and damage to property due to electrical faults

If the line is longer than 30 m, there is an increased probability of transmission errors and damage to the device due to atmospheric discharge.
Use a shielded cable for connection to the digital outputs.

CAUTION!

Measurement errors when using as a pulse output

When using the digital outputs as pulse outputs, measurement errors may arise due to the residual ripple.
Therefore, use a mains adapter for the supply voltage for the digital inputs and outputs, which has a residual ripple of less than 5% of the supply voltage.

CAUTION!

Damage to property due to connection errors

The digital outputs are not short-circuit proof! Connection errors can therefore cause damage to the connections.
Ensure that the wiring is correct when connecting the outputs.

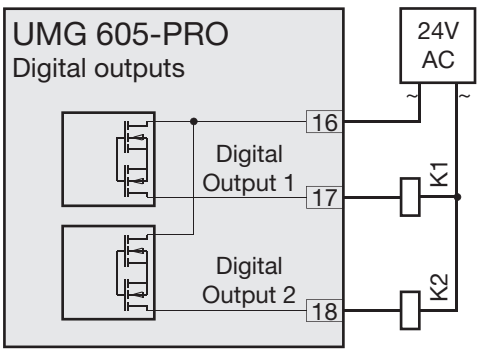

Fig. Connection of an AC voltage relay to the digital outputs.

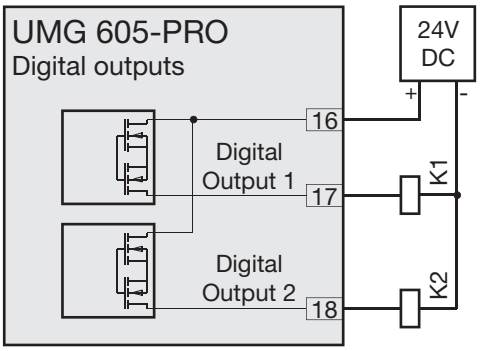

Fig. Connection of a DC voltage relay to the digital outputs.

9. Commissioning

Before commissioning, clear any content that may be present on the power meters, min./max. values or recordings due to the production process.

9. 1 Connecting the supply voltage

After connecting the supply voltage, the text “Start up” is shown on the display. Approximately two to six seconds later, the device switches to the first measured value indication.

If no display appears, check whether the power supply voltage is within the rated voltage range.

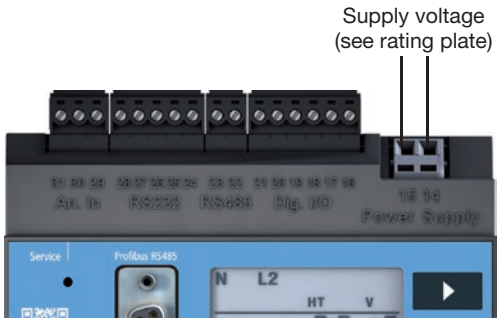

Fig.23.1 Example connection for the supply voltage Uh.

9. 2 Frequency measurement

In order to measure the frequency, at least one voltage measurement path (L-N) must have a measured voltage of greater than 10 V. Only detected frequencies in the range of 15 Hz to 440 Hz are used for measurement on the current and voltage measurement inputs.

9. 3 Connecting the measured voltage

After connecting the measured voltages, the measured values displayed by the device for the L-N and L-L voltages must correspond to those on the voltage measurement input.

If a voltage transformer factor is programmed, it must be taken into consideration for the comparison. At least one phase (L) and the neutral conductor (N) must be connected to the voltage measurement input for measurement.

A measured voltage of greater than 10 Veff must be present on at least one of the voltage measurement inputs so that the device can determine the mains frequency.

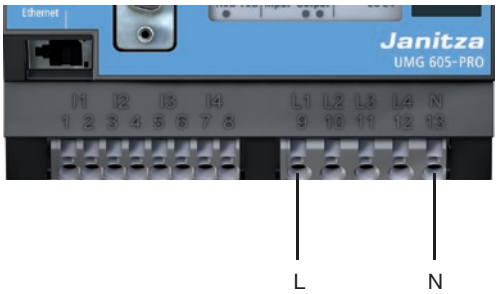

9. 4 Phase sequence

Check the direction of the rotating field voltage in the measured value indication of the device. A “right-hand” rotation field usually exists.

9. 5 Applying the measured current

The device:

- is intended for connecting current transformers with secondary currents of ../1 A and ../5 A.
- does not measure DC.
- has current measurement inputs that are continuously loaded with 6 A or loaded with 100 A for 1 second.

Proceed as follows to connect measured current to the device:

1. Connect the currents to be measured to voltage measurement inputs I1 to I4.
2. Short circuit all current transformer outputs except for one.
3. Compare the currents displayed by the device with the applied current.

- Bearing in mind the current transformer conversion ratio, the current displayed by the device must correspond to the current input.
- The device must display approx. zero amperes in the short circuited current measurement inputs.

The current transformer ratio is factory-set to 5/5A and must be adapted to the current transformer used if necessary.

9. 6 Checking the power measurement

Short-circuit all current transformer outputs except for one and check the displayed power outputs.

The device may only display one power output in the phase with a non-short-circuited current transformer input. If this is not the case, check the connection of the measured voltage and the measuring-circuit current.

If the power figure is correct but the power sign is negative, connections S1(k) and S2(l) on the current transformer may be mixed up or they are supplying active energy back to the network.

10. Operation

In order to make it easier to install and commission the device without a PC, it has a display, as well as buttons 1, 2 and the Service button.

Important parameters such as the current transformer and the device address are listed in the parameter list in section “17. Parameter list” and can be programmed directly on the device.

When operating, the device differentiates between:

- Display mode and
- Programming mode

10. 1 Button functions

Press the button for a short time:
- scroll forwards
- digit/value +1

Press the button for a long time:
- scroll backwards
- digit/value -1

Press and hold both buttons simultaneously for around 1 second:
- Switch between display mode and programming mode.

The device is operated using buttons 1 and 2.

The service button is only for use by trained service employees.

Fig. Front view of UMG 605 -PRO control element

10. 2 Display mode

After the power returns, the device is in display mode.

In display mode, you can use buttons 1 and 2 to scroll through the measured value indications.

- Use button 1 to select the phase for the measured values.
- Use button 2 to scroll between the measured values for current, voltage, power, etc.

The factory default setting for the measured value indications is shown in section “17. Parameter list”.

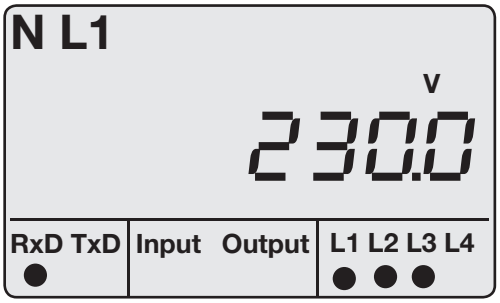

Fig. Display example for "Display mode". Measured value indication U_{L1-N} = 230.0 V.

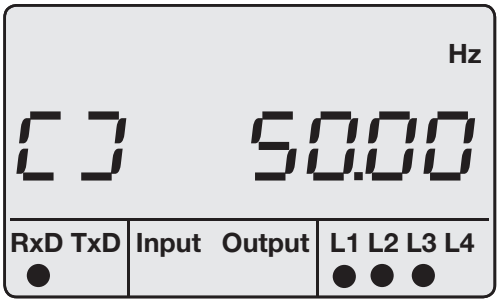

Fig. Display example for rotation field and frequency.

NOTE!
You can reconfigure the functions of the buttons and the selection of the values to be displayed using the GridVis® software as a Jasic program. (see www.janitza.de)

10. 3 Programming mode

You view and change the most important settings required to operate the device in programming mode.

The addresses for the most important settings are provided in section “17. Parameter list”.

You can make further settings in the GridVis® software supplied.
Pressing and holding buttons 1 and 2 simultaneously for approx. 1 second takes you to programming mode after the password prompt.

If no display password has been set up, you are taken directly to the first programming menu.

Programming mode is indicated on screen by the text "PRG". The digit in the address flashes. If you are in programming mode and no button is pressed around 60 seconds or if buttons 1 and 2 are pressed simultaneously for around 1 second, the device returns to display mode.

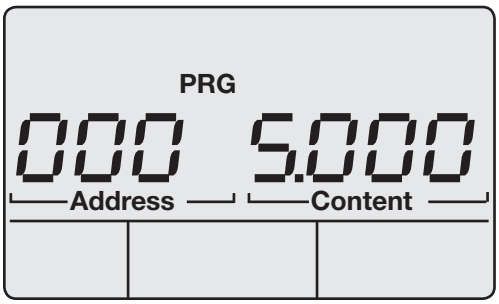

Fig. Display example for "Programming mode", address 000 with a content of 5,000.

10. 4 Display password

To make it harder to accidentally modify the programming data on the device, you can program a 4-character display password. No display password is factory-set. No display password is requested in the factory default setting.

10. 5 Homepage password

You can password-protect access to the device’s homepage. No homepage password is factory-set.

The device differentiates between 3 password modes for the homepage password:

- 0 = The homepage password is not requested.
- 2 = Changes to the configuration and the measured values display require the password to be entered once.
- 128 = Each change to the configuration requires the password to be entered again

NOTE!
If you no longer remember your password, you can only change it using the GridVis® software. (see www.janitza.de)

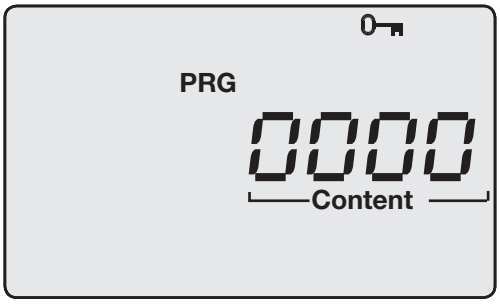

Fig. Request window for the display password

Addr.	Contents
500	Display password 0 = The password is not requested.
501	Homepage, password mode
502	Homepage password

Fig. Excerpt from the parameter list.

11. Configuration

11. 1 Measurement

The device has 4 measurement channels for voltage measurement (V1 - V4 against Vref) and 4 measurement channels for current measurement (I1 to I4).
Measured voltage and measured current for the measurement channels 1-4 must derive from the same network.

11. 1. 1 Baseline measurement (measurement channels 1-3)

The baseline measurement uses measurement channels 1-3. Use measurement channels 1-3 for measurement in three-phase systems.
You can choose one of 14 measurement switches for the baseline measurement. The relevant connection illustrations are provided in section “6. 6 Connection variants”.
You can use parameter address “110” to set the selected measurement switch.

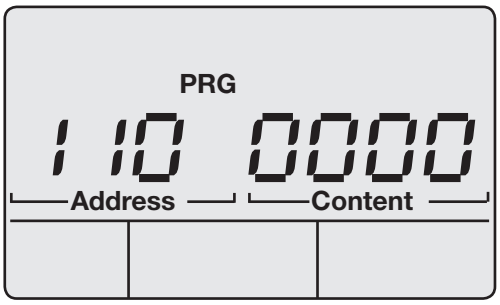

Fig. Display example; measurement switch for the baseline measurement, address 110 with a content of 0.

Selectable measurement switches:

- 0 = 4w3m (factory default setting)
- 1 = 4w2m
- 2 = 4w2u
- 3 = 4w2i
- 4 = 3w3m
- 5 = 3w2m
- 6 = 3w2u
- 7 = 3w2i
- 8 = 2w2m
- 9 = 2w1m
- 10 = 4w3m_hv
- 11 = 4w2u_hv
- 12 = 3w2u_hv
- 13 = 3w2m_hv

11. 1. 2 Supporting measurement (measurement channel 4)

The supporting measurement only uses measurement channel 4.

Use measurement channel 4 when measuring in single-phase systems or in three-phase systems with symmetrical loads.

The frequency setting and the setting for the relevant voltage are pulled automatically from the baseline measurement settings.

You can choose one of 3 measurement switches for the supporting measurement. The relevant connection illustrations are provided on page 23.

You can use parameter address “111” to set the selected measurement switch.

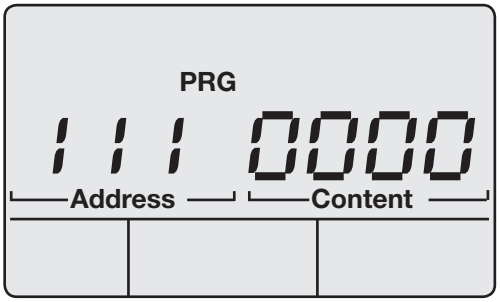

Fig. Display example; measurement switch for the supporting measurement, address 111 with a content of 0.

Selectable measurement switches:

- 0 = 2w1n (factory default setting)
- 1 = 3w1m
- 2 = 4w1m

11. 3 Voltage transformer ratio

You can use addresses 002 and 003 to set the voltage transformer ratio for the baseline measurement.

You can use addresses 012 and 013 to set the voltage transformer ratio for the supporting measurement.

A voltage transformer ratio of 400 V / 400 V is factory-set for all 4 voltage transformer inputs in the factory.

Address	Current transformer values
Baseline measurement	
002	L1 L2 L3 (primary)
003	L1 L2 L3 (secondary)
Supporting measurement	
012	L4 (primary)
013	L4 (secondary)

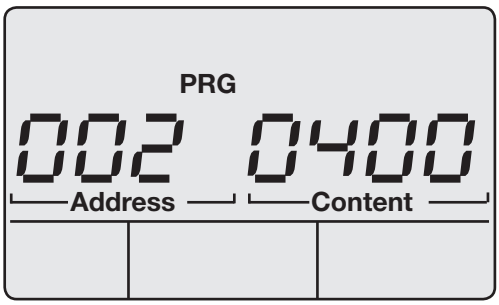

Fig. Example; voltage transformer (primary) for the baseline measurement, address 002 with a content of “400“.

11. 2 Current transformer ratio

You can set the current transformer ratio for the baseline measurement using addresses 000 and 001.

You can use addresses 010 and 011 to set the current transformer ratio for the supporting measurement.

A current transformer ratio of 5 A / 5 A is factory-set for all 4 current transformer inputs in the factory.

Address	Current transformer values
Baseline measurement	
000	L1 L2 L3 (primary)
001	L1 L2 L3 (secondary)
Supporting measurement	
010	L4 (primary)
011	L4 (secondary)

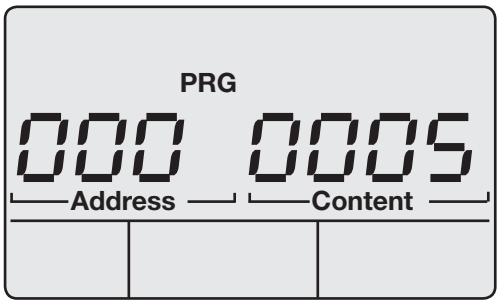

Fig. Example; Current transformer (primary) for the baseline measurement, address 000 with a content of “5“.

11. 4 RS232 configuration

The following data must be programmed to operate the RS232 interface:

- baud rate,
- operating mode.

For information on the factory default setting and the setting ranges, see the parameter list in the appendix.

Address	Settings
201	Baud rate, RS232 0 = 9600Bit/s 1 = 19200Bit/s 2 = 38400Bit/s 3 = 57600Bit/s 4 =115200Bit/s
204	RS232. mode 0 = Modbus RTU/slave 3 = Debug 6 = SLIP (for internal use only)

11. 5 RS485 configuration

The following data must be programmed to operate the RS485 interface:

- device address,
- baud rate,
- operating mode.

For information on the factory default setting and the setting ranges, see the parameter list in the appendix.

Address	Settings
200	Device address (1 to 255) applies to Modbus and Profibus 1 = factory default setting
202	Baud rate, RS485 0 = 9600Bit/s 1 = 19200Bit/s 2 = 38400Bit/s 3 = 57600Bit/s 4 =115200Bit/s 5 = 921600Bit/s
203	RS485, mode 0 = Modbus RTU/slave 1 = Modbus RTU/master 2 = Gateway transparent

11. 6 Ethernet configuration

Static IP address
In simple networks with no DHCP server, the network address must be set right on the device itself.

BootP
BootP enables the device to be integrated into an existing network fully automatically. However, BootP is an older protocol and does not provide the scope of functions provided by DHCP.

DHCP mode
DHCP makes it possible integrate a UMG 604-PRO into an existing network fully automatically without the need for any additional configuration. When started, the device automatically obtains the IP address, the subnet mask and the gateway from the DHCP server.
The device is factory-set to the “DHCP client”.

Zeroconf
Zeroconf enables a UMG 605PRO to be automatically integrated (IP address assignment) into an existing network without a DHCP server.

Address	Settings
205	DHCP mode 0 = static IP 1 = BootP 2 = DHCP client 3 = Zeroconf
300	IP address, xxx --- --- ---
301	IP address, --- xxx --- ---
302	IP address, --- --- xxx ---
303	IP address, --- --- --- xxx
304	IP mask, xxx --- --- ---
305	IP mask, --- xxx --- ---
306	IP mask, --- --- xxx ---
307	IP mask, --- --- --- xxx
310	IP gateway, xxx --- --- ---
311	IP gateway, --- xxx --- ---
312	IP gateway, --- --- xxx ---
313	IP gateway, --- --- --- xxx

CAUTION! **Damage to property due to incorrect network settings**

Incorrect network settings can cause faults in the IT network.
Obtain information from your network administrator about the correct settings for your device.

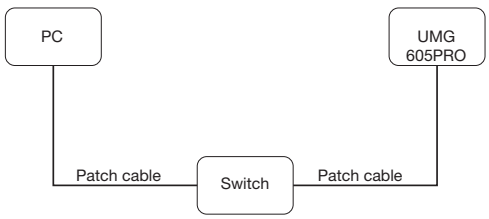

Fig. Connection example, the UMG 604PRO and PC require a static IP address.

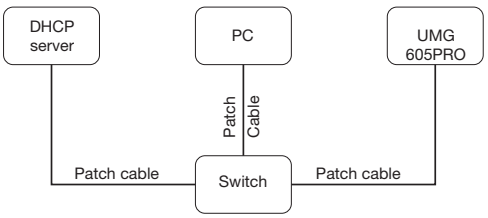

Fig. Connection example, the UMG 604PRO and PC are automatically assigned an IP address by a DHCP server.

11. 7 Profibus configuration

11. 7. 1 Profiles

The device can manage 16 Profibus profiles, each with a maximum of 128 data bytes.

The first data byte of the PLC's output range always contains the profile number of the Profibus profile requested by the UMG.

To request a Profibus profile, write the profile number to the first byte of the PLC's output range.

All system variables and global variables[1] can be individually scaled and converted into one of the following formats:

- 8, 16, 32 bit integer with and without sign.
- 32 or 64 bit float format.
- Big or little endian[2].

1) Global variables are variables that the user defines in Jasic and are available to each interface in the UMG604
2) Big endian = high byte before low byte.
Little endian = low byte before high byte.

Address	Settings
200	Device address (1 to 255) applies to Modbus and Profibus 1 = factory default setting

Fig. Excerpt from the parameter list.

11. 7. 2 Device master file

The device master file, abbreviated as the GSD file, describes the Profibus characteristics of the UMG. The GSD file is required by the configuration program of the PLC.

The device master file for your device is called “u6050c2d.GSD” and is available on the Janitza homepage.

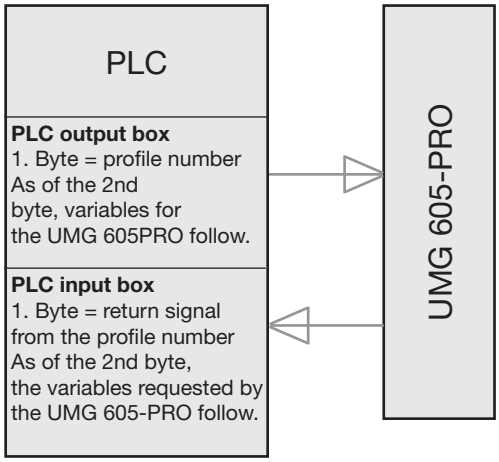

Fig. Block diagram for data exchange between PLC and UMG 605-PRO.

11. 7. 3 Pre-set profiles

Profibus profile number 0

	Byte index	Value type	Value format	Scaling
1	1	Voltage L1-N	Float	1
2	5	Voltage L2-N	Float	1
3	9	Voltage L3-N	Float	1
4	13	Voltage L4-N	Float	1
5	17	Voltage L2-L1	Float	1
6	21	Voltage L3-L2	Float	1
7	25	Voltage L1-L3	Float	1
8	29	Current L1	Float	1
9	33	Current L2	Float	1
10	37	Current L3	Float	1
11	41	Current L4	Float	1
12	45	Active power L1	Float	1
13	49	Active power L2	Float	1
14	53	Active power L3	Float	1
15	57	Active power L4	Float	1
16	61	Cosphi (math.) L1	Float	1
17	65	Cosphi (math.) L2	Float	1
18	69	Cosphi (math.) L3	Float	1
19	73	Cosphi (math.) L4	Float	1
20	77	Frequency	Float	1
21	81	Total active power L1-L4	Float	1
22	85	Total reactive power L1-L4	Float	1
23	89	Total apparent power L1-L4	Float	1
24	93	Total cosphi (math.) L1-L4	Float	1
25	97	Total effective current L1-L4	Float	1
26	101	Total active energy L1-L4	Float	1
27	105	Ind. Total reactive energy L1-L4	Float	1
28	109	THD voltage L1	Float	1
29	113	THD voltage L2	Float	1
30	117	THD voltage L3	Float	1

Profibus profile number 1

	Byte index	Value type	Value format	Scaling
1	1	Voltage L1-N	Float	1
2	5	Voltage L2-N	Float	1
3	9	Voltage L3-N	Float	1
4	13	Voltage L2-L1	Float	1
5	17	Voltage L3-L2	Float	1
6	21	Voltage L1-L3	Float	1
7	25	Current L1	Float	1
8	29	Current L2	Float	1
9	33	Current L3	Float	1
10	37	Active power L1	Float	1
11	41	Active power L2	Float	1
12	45	Active power L3	Float	1
13	49	Cosphi (math.) L1	Float	1
14	53	Cosphi (math.) L2	Float	1
15	57	Cosphi (math.) L3	Float	1
16	61	Frequency	Float	1
17	65	Total active power L1-L3	Float	1
18	69	Total reactive power L1-L3	Float	1
19	73	Total apparent power L1-L3	Float	1
20	77	Total cosphi (math.) L1-L3	Float	1
21	81	Total effective current L1-L3	Float	1
22	85	Total active energy L1-L3	Float	1
23	89	Ind. Total reactive energy L1-L3	Float	1
24	93	THD voltage L1	Float	1
25	97	THD voltage L2	Float	1
26	101	THD voltage L3	Float	1
27	105	THD current L1	Float	1
28	109	THD current L2	Float	1
29	113	THD current L3	Float	1

Profibus profile number 2

	Byte index	Value type	Value format	Scaling
1	1	Total active energy L1-L3	Float	1
2	5	Rel. Total active energy L1-L3	Float	1
3	9	Deliv. Total active energy L1-L3	Float	1
4	13	Total reactive energy L1-L3	Float	1
5	17	Ind. Total reactive energy L1-L3	Float	1
6	21	Total cap. reactive energy L1-L3	Float	1
7	25	Total apparent energy L1-L3	Float	1
8	29	Active energy L1	Float	1
9	33	Active energy L2	Float	1
10	37	Active energy L3	Float	1
11	41	Inductive reactive energy L1	Float	1
12	45	Inductive reactive energy L2	Float	1
13	49	Inductive reactive energy L3	Float	1

Profibus profile number 3

	Byte index	Value type	Value format	Scaling
1	1	Active power L1	Float	1
2	5	Active power L2	Float	1
3	9	Active power L3	Float	1
4	13	Total active power L1-L3	Float	1
5	17	Current L1	Float	1
6	21	Current L2	Float	1
7	25	Current L3	Float	1
8	29	Total current L1-L3	Float	1
9	33	Total active energy L1-L3	Float	1
10	37	CosPhi (math.) L1	Float	1
11	41	CosPhi (math.) L2	Float	1
12	45	CosPhi (math.) L3	Float	1
13	49	Total CosPhi (math.) L1-L3	Float	1
14	53	Reactive power L1	Float	1
15	53	Reactive power L2	Float	1
16	53	Reactive power L3	Float	1
17	53	Total reactive power L1-L3	Float	1
18	53	Apparent power L1	Float	1
19	53	Apparent power L2	Float	1
20	53	Apparent power L3	Float	1
21	53	Total apparent power L1-L3	Float	1

11. 8 Recording configuration

2 recordings are pre-configured in the device's factory default setting.

Recordings are adjusted and expanded using the GridVis® software.

Recording 1

The following measured values are recorded with the time base of 15 minutes:

- Voltage effective L1
- Voltage effective L2
- Voltage effective L3
- Voltage effective L4
- Voltage effective L1-L2
- Voltage effective L2-L3
- Voltage effective L3-L1
- Current effective L1
- Current effective L2
- Current effective L3
- Current effective L4
- Active power L1
- Active power L2
- Active power L3
- Active power L4
- Total active power L1-L3
- Total active power L1-L4
- Reactive power fundamental oscillation L1
- Reactive power fundamental oscillation L2
- Reactive power fundamental oscillation L3
- Reactive power fundamental oscillation L4
- Total reactive power fundamental oscillation L1-L3
- Total reactive power fundamental oscillation L1-L4

(The mean value, minimum value, and maximum value are also recorded for each measured value.)

Recording 2

The following measured values are recorded with the time base of 1 hour:

- Active energy drawn L1
- Active energy drawn L2
- Active energy drawn L3
- Active energy drawn L4
- Total active energy drawn L1-L3
- Total active energy drawn L1-L4
- Inductive reactive energy L1
- Inductive reactive energy L2
- Inductive reactive energy L3
- Inductive reactive energy L4
- Total inductive reactive energy L1-L3
- Total inductive reactive energy L1-L4

12. System information

12. 1 Measurement range exceeded

If the measurement range is exceeded, it is displayed as long as this persists and cannot be acknowledged. The measurement range is exceeded if at least one of the four voltage or current measurement inputs is outside its specified metering range.

If the measurement range is exceeded, this is shown on the display with “EEEE”.

Symbols L1, L2, L3 and L4 are used to show the input on which the measurement range was exceeded. The "V" and "A" symbols indicate whether the measurement range has been exceeded in the current or voltage circuit.

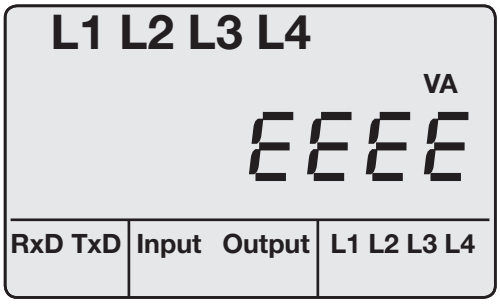

Fig. Measured value indication with measurement range exceeded.

CAUTION!

Damage to property due to not observing the connection conditions

Failure to observe the connection conditions can damage or destroy your device.
Therefore, note the following:

- **Adhere to the specifications for voltage and frequency on the rating plate.**

12. 4 Serial number

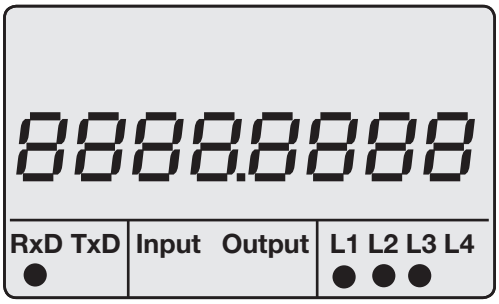

Fig. Measured value indication with serial number.

12. 5 Date

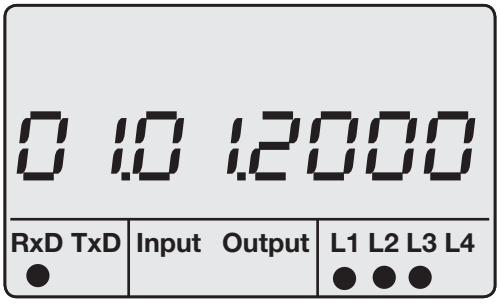

Fig. Measured value indication with date.

12. 2 Firmware release

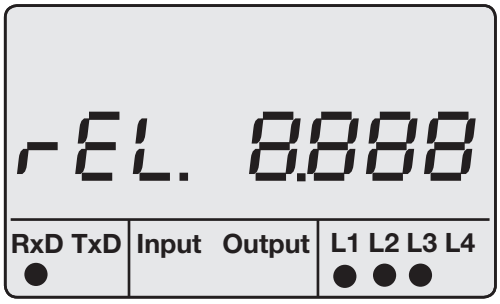

Fig. Measured value indication for the firmware release.

12. 3 Time

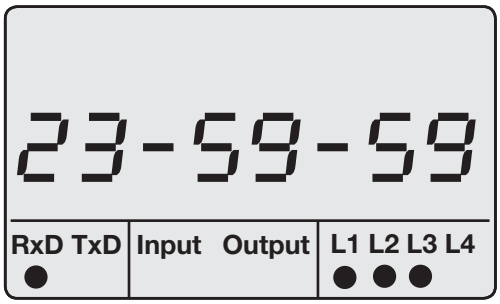

Fig. Measured value indication with time.

13. Device homepage

Your measurement device has an integrated web server, which has a separate homepage. You can use this device home page to access your measurement device from any end device via a standard web browser. You can access the homepage for your device by entering the device's PI address in a web browser on your end device. Section "11. 6 Ethernet configuration" explains how to connect the device to the internet.

You can do the following here without first installing any software:

- call historical and current measured values.
- call the power quality status in an easy to understand illustration.
- control your device remotely.
- access installed apps.

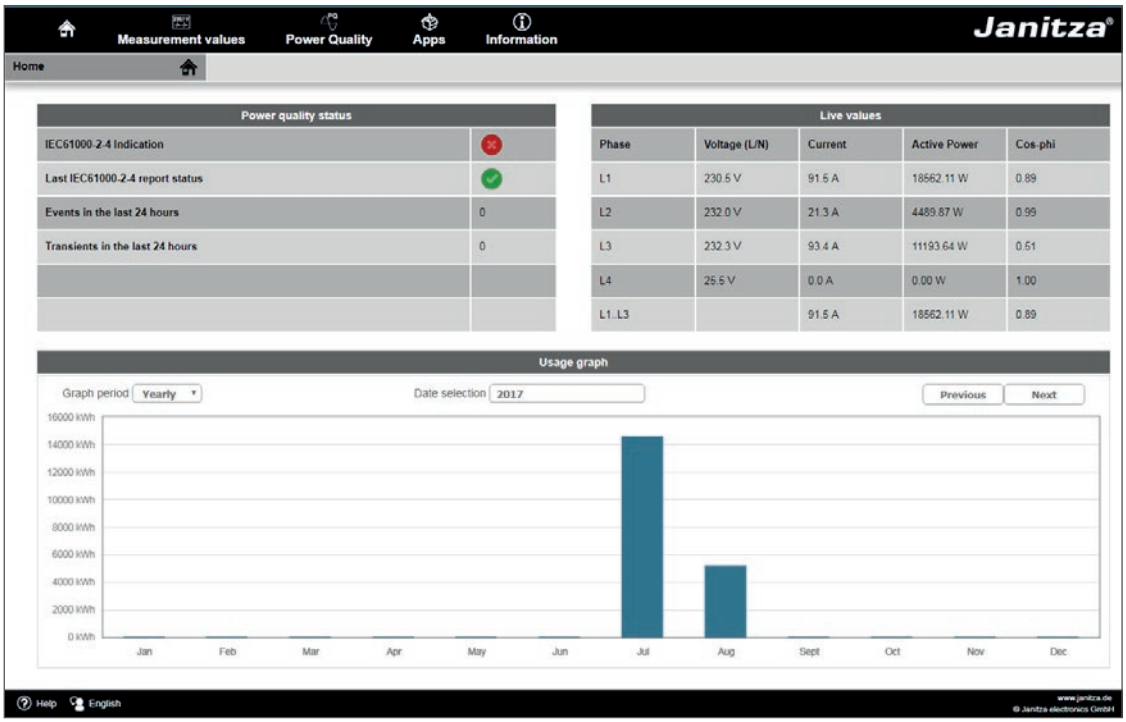

Fig. Device homepage overview

13. 1 Measured values

You can use the measured values menu item to call simple and detailed views of the measured values, and to display individual measured values. The following menu items are available:

- Short overview
- Detailed measured values
- Diagrams
- Events
- Transients

13. 1. 1 Short overview

The short overview provides you with the most important measured values for each phase, such as the current voltage values, power values and current strength.

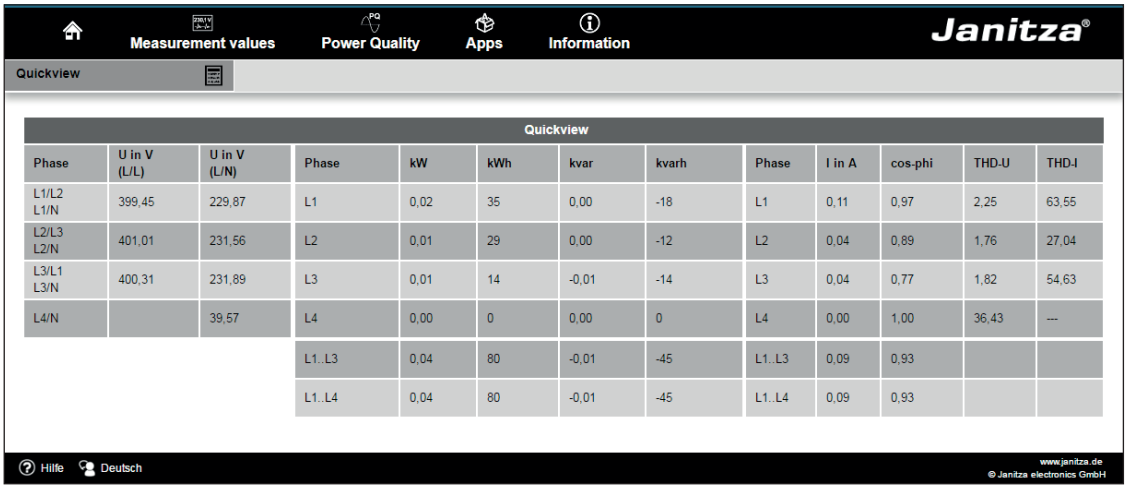

Quickview

Phase	U in V (L/L)	U in V (L/N)	Phase	kW	kWh	kvar	kvarh	Phase	I in A	cos-phi	THD-U	THD-I
L1/L2 L1/N	399,45	229,87	L1	0,02	35	0,00	-18	L1	0,11	0,97	2,25	63,55
L2/L3 L2/N	401,01	231,56	L2	0,01	29	0,00	-12	L2	0,04	0,89	1,76	27,04
L3/L1 L3/N	400,31	231,89	L3	0,01	14	-0,01	-14	L3	0,04	0,77	1,82	54,63
L4/N		39,57	L4	0,00	0	0,00	0	L4	0,00	1,00	36,43	---
			L1..L3	0,04	80	-0,01	-45	L1..L3	0,09	0,93		
			L1..L4	0,04	80	-0,01	-45	L1..L4	0,09	0,93		

Fig. Short overview of measured values

13. 1. 2 Detailed measured values

In the overview, you can call extensive information on the following points:

- Voltage
- Current
- Power
- Harmonic oscillations
- Energy
- Peripheral devices (digital inputs/outputs, temperature measurements)

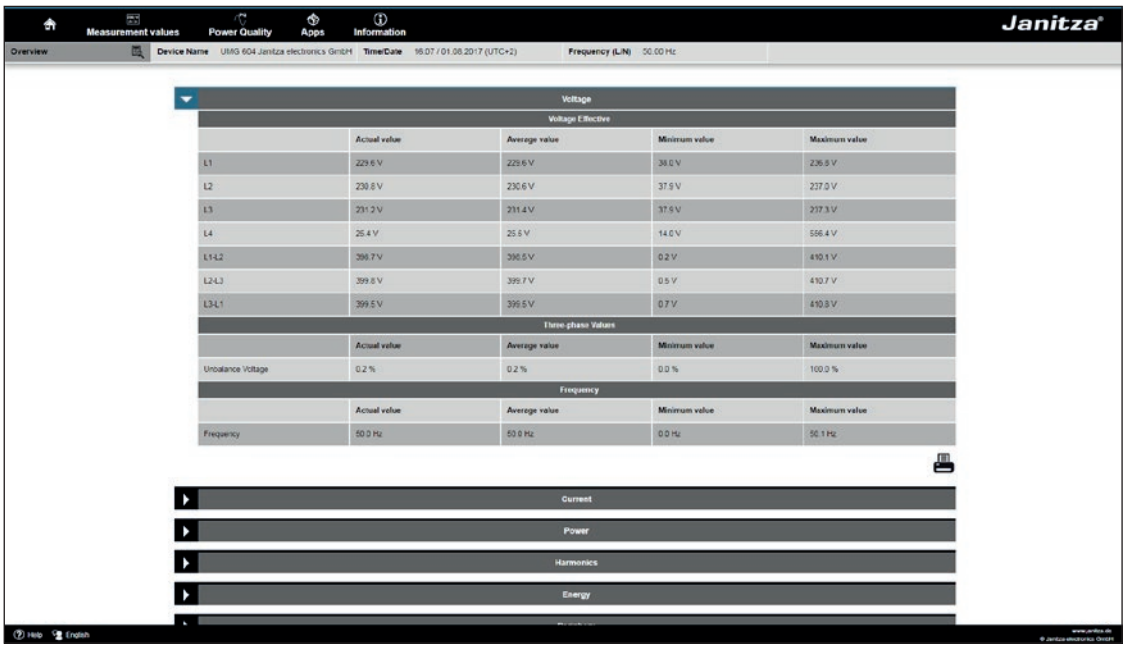

Fig. Detailed overview of measured values

13. 1. 3 Diagrams

You can use the “Diagrams” item to access the measured values monitor. The measured values monitor is a configurable display of current and historical measured values with automatic scaling. In order to display a graphic of the measured values, drag the required values from the list on the left edge of the screen into the field in the middle of the screen.

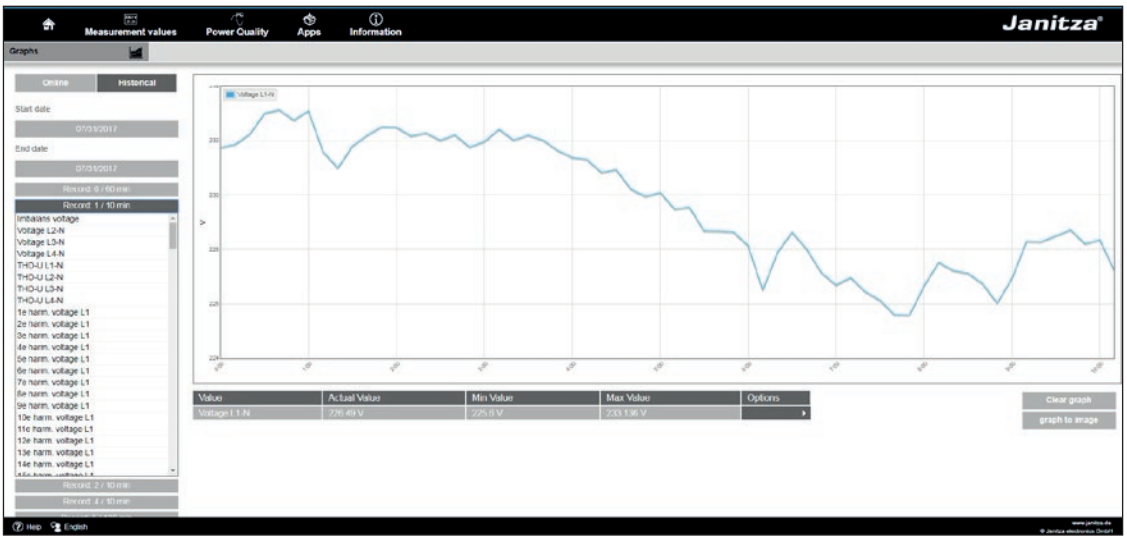

Fig. Device homepage event records

13. 1. 4 Events

You can use events item to display a graphical illustration of the recorded events such as overcurrent or undervoltage by clicking the relevant event in the list.

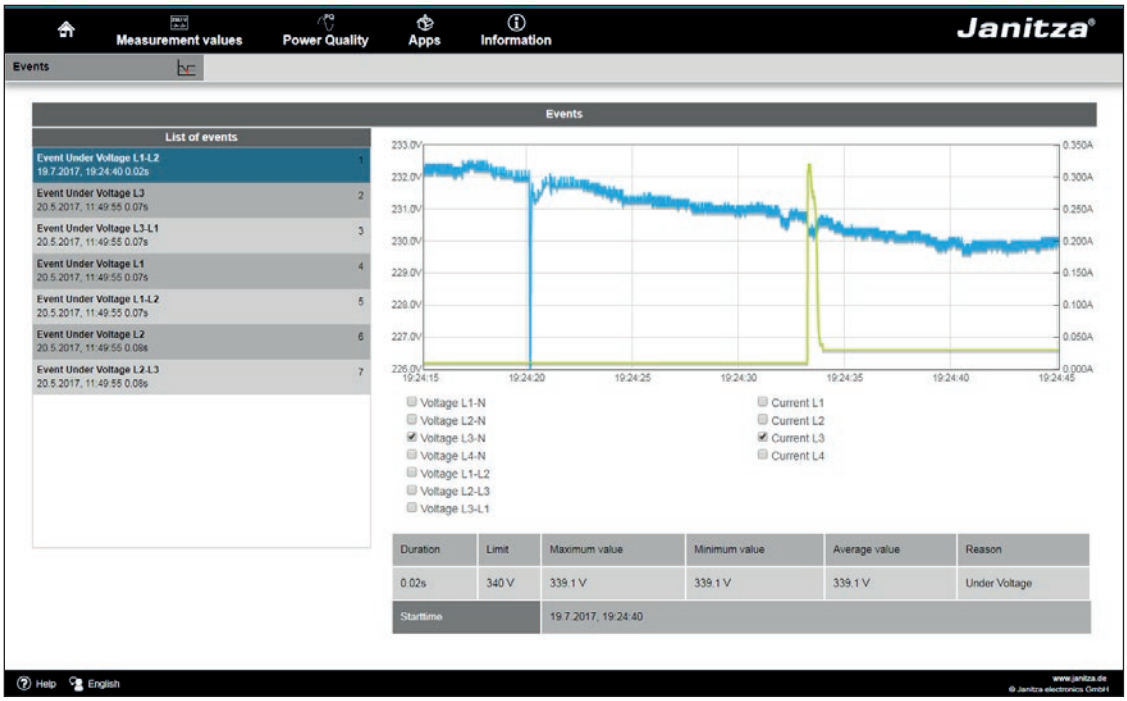

Fig. Event records

13. 1. 5 Transients

The “Transients” area provides a graphic illustration of transients within a date list. Transient voltages:

- are fast impulse transient effects in electrical networks.
- are unpredictable from a time perspective and have a limited duration.
- are caused by lightning strikes, switching operations or by tripped fuses.

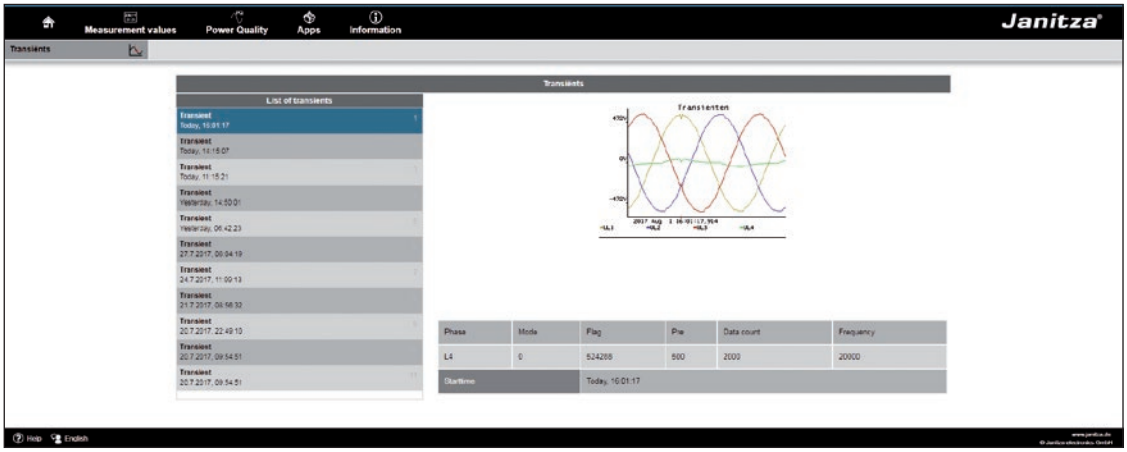

Fig. Transients

13. 2 Power quality

The “Power quality” section (PQ) provides you with the option of calling the PQ status in a clear way according to common standards. Here, you have access to permanent power quality monitoring in accordance with:

- EN 50160 in energy supply networks.
- IEC 61000-2-4 in customer supply networks.

The display is based on the traffic light principle, which makes it easy to detect events that do not meet the relevant quality requirements without in-depth knowledge.

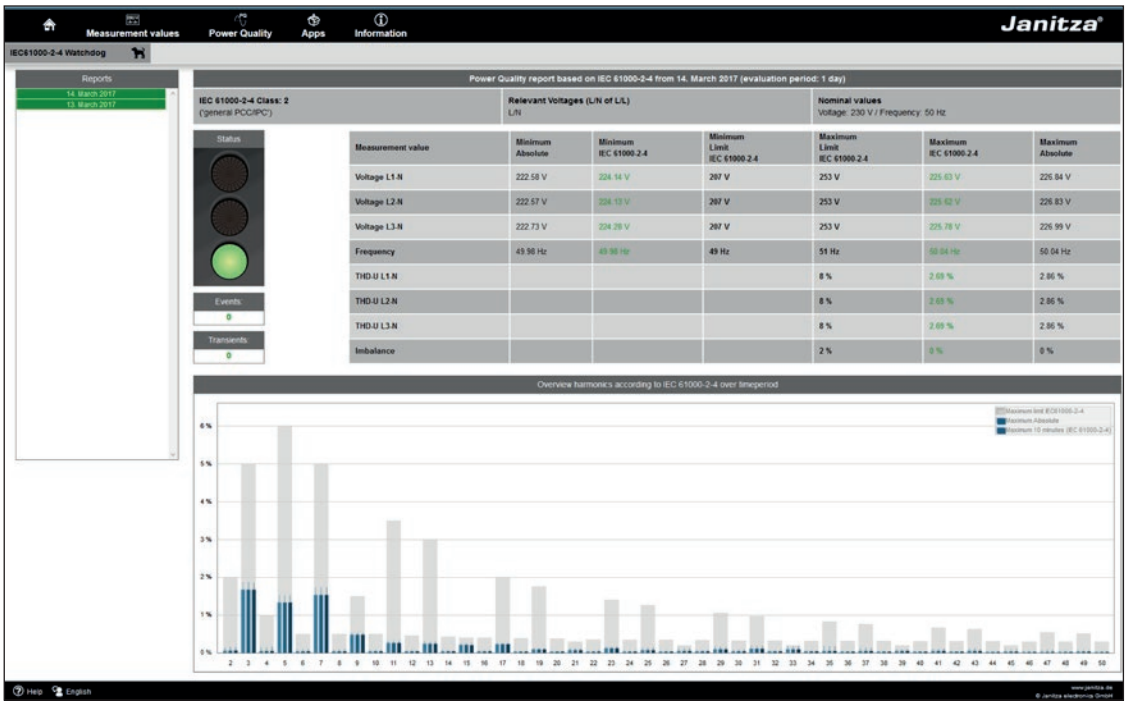

Fig. IEC 61000-2-4 parameters with traffic-light principle

13. 3 Apps

You have the option of extending the functions on your device retrospectively by installing additional apps.

13. 3. 1 Push Service

The push service is an example of an app installed in the factory. The push service sends measured values directly from the device to a cloud or portal solution chosen by you- such as the Janitza Energy Portal

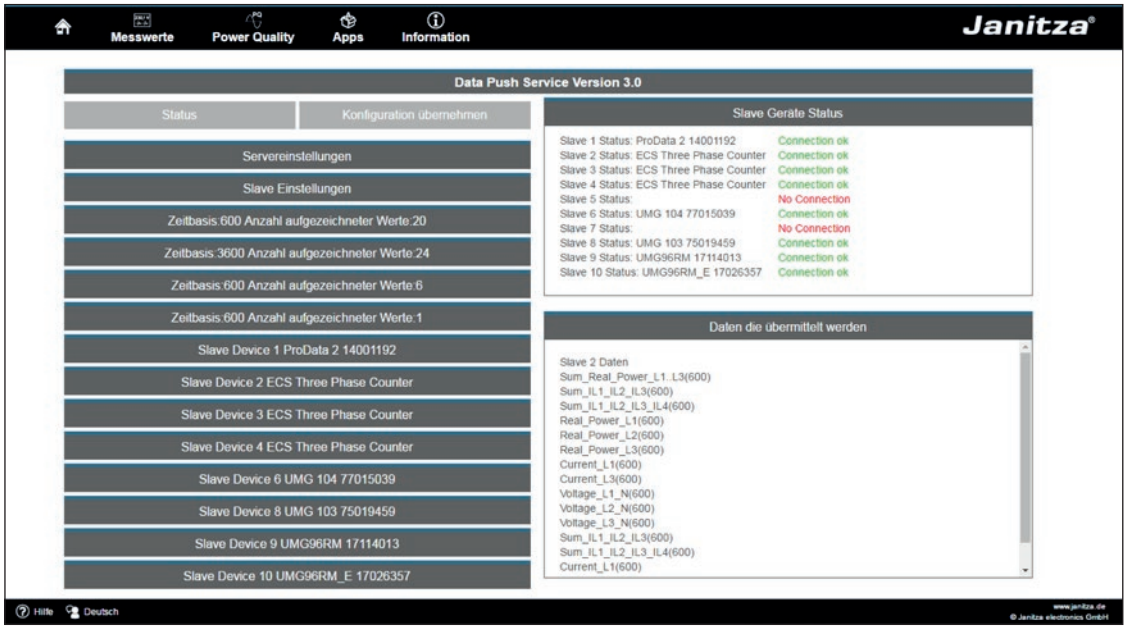

Fig. Push Service

13. 4 Information

13. 4. 1 Device information

You can use the device information menu item to obtain all information and settings that you can change on the device.

13. 4. 2 Downloads

You can use the downloads item to access the download area on the Janitza homepage. You can download catalogues and user manuals from here.

13. 4. 3 Display

The display item provides you with the display of your device, which corresponds to the real display.

You can control the device remotely here by clicking the control buttons using the mouse.

Fig. Operating the UMG 605-PRO via the device homepage

14. Service and maintenance

The device underwent various safety checks before delivery and is marked with a seal.
If a device is open, the safety checks must be repeated. Warranty claims will only be accepted if the device is unopened.

14. 1 Repair and calibration

Repair work and calibration can be carried out by the manufacturer only.

14. 2 Front film

The front film can be cleaned with a soft cloth and standard household cleaning agent.
Do not use acids and products containing acid for cleaning.

14. 3 Disposal

Observe the national regulations!
If necessary, dispose of individual parts according to their properties and existing country-specific regulations, e.g. as:

- Electronic waste
- Plastics
- Metals

or commission a certified disposal company with scrapping.

14. 4 Service

Should questions arise, which are not described in this manual, please contact the manufacturer directly.
We will need the following information from you to answer any questions:

- device name (see rating plate),
- serial number (see rating plate),
- software release (see measured value indication),
- measured voltage and supply voltage,
- precise description of the error.

14. 5 Battery

The internal clock is fed from the supply voltage.

If the supply voltage fails then the clock is powered by the battery.
The clock provides date and time information, for the records, min. and max. values and events, for example.

The life expectancy of the battery is at least 5 years with a storage temperature of +45°C.
The typical life expectancy of the battery is 8 to 10 years.
The device must be opened to change the battery.

> **NOTE!**
> If the device has been opened, a new safety inspection must be carried out to ensure safe operation. Warranty claims will only be accepted if the device is unopened.

14. 6 Firmware update

In order to carry out a firmware update, connect the device to a computer via Ethernet and access it using the GridVis® software.

Open the firmware update wizard by clicking “Update device” in the “Extras” menu.

Select the relevant update file and carry out the update.

> **NOTE!**
> Firmware may **not** be updated via the RS485 interface.

15. Procedure in the event of faults

Possible fault	Cause	Remedy
No display	External fuse for the power supply voltage has tripped.	Replace fuses.
	Device defective.	Send the device to the manufacturer for repair.
No current display	Measured voltage is not connected.	Connect the measured voltage.
	Measurement current is not connected.	Connect measuring-circuit current.
Displayed current is too high or too low	Current measurement in the wrong phase.	Check connection and correct if necessary.
	Current transformer factor is incorrectly programmed.	Read out and program the CT ratio on the current transformer.
Displayed voltage is too low or too high.	Measurement in the wrong phase.	Check connection and correct if necessary.
	Voltage transformer incorrectly programmed.	Read out and program the voltage transformer ratio at the voltage transformer.
Voltage displayed is too low.	Measurement range exceeded.	Use voltage transformers.
	The peak voltage value at the measurement input has been exceeded by the harmonics.	**Attention!** Ensure the measurement inputs are not overloaded.
“EEEE” and “V” on the display	The voltage measurement range has been exceeded.	Check the measured voltage and install a suitable voltage transformer if necessary.
“EEEE” and “A” on the display	The current measurement range has been exceeded.	Check the measured current and install a suitable current transformer if necessary.

Table Procedure in the event of faults, part 1

Possible fault	Cause	Remedy
“Error CF” on the display	The calibration data could not be read.	Send the device to the manufacturer for inspection and testing along with an accurate fault description.
Active power, consumption/supply reversed.	At least one current transformer connection is mixed up/ reversed.	Check connection and correct if necessary.
	A current circuit is assigned to the wrong voltage circuit.	Check connection and correct if necessary.
Active power too high or too low.	The programmed CT ratio is incorrect.	Read out and program the CT ratio on the current transformer
	The current circuit is assigned to the wrong voltage circuit.	Check connection and correct if necessary.
	The programmed voltage transformer ratio is incorrect.	Read out and program the voltage transformer ratio at the voltage transformer.
No connection to the device.	RS485: - Incorrect device address. - Wrong protocol. - Termination missing.	Set the device address. Select the protocol. Terminate the bus with a termination resistor (120 ohm).
	Ethernet: - Incorrect IP address - The hidden button (Service) was pressed.	Set the IP address on the device. Describe address 204 with 0 and set the IP address or activate DHCP.
Device still does not work despite the above measures.	Device defective.	Send the device to the manufacturer for inspection, along with an accurate fault description .

Table Procedure in the event of faults, part 2

16. Technical data

16. 1 General

Net weight	350 g
Device dimensions	Approx. l=107.5 mm, w=90 mm, h=82 mm (per DIN 43871:1992)
Housing flammability rating	UL 94V-0
Installation position	any
Fastening/assembly	35 mm DIN rail (per IEC/EN60999-1, DIN EN 50022)
Battery	Type Lithium CR2032, 3 V

16. 2 Environmental conditions

The device is intended for weatherproof, fixed installation and meets the operational conditions in accordance with DIN IEC 60721-3-3.

Working temperature range	-10 °C to +55 °C
Relative humidity	5 to 95% RH, (at +25 °C) without condensation
Pollution degree	2
Operating altitude	0 to 2000 m above sea level
Installation position	any
Ventilation	Forced ventilation is not required.

16. 3 Transport and storage

The following information applies to devices which are transported or stored in the original packaging.

Free fall	1 m
Temperature	-20 °C to +70 °C

16. 4 Supply voltage

The supply voltage must be connected through a UL/IEC approved fuse (6A char. B) to the device.

230 V option: • Nominal range • Operating range • Power consumption • Overvoltage category	 95 V to 240 V (50/60Hz) / DC 135 V to 340 V +-10% of nominal range max. 3.2 W / 9 VA 300 V CATII
90 V option (without UL approval): • Nominal range • Operating range • Power consumption • Overvoltage category	 50 V to 110 V (50/60 Hz) / DC 50 V to 155 V +-10% of nominal range max. 3.2 W / 9 VA 300 V CATII
24V option: • Nominal range • Operating range • Power consumption • Overvoltage category	 20 V to 50 V (50/60 Hz) / DC 20 V to 70 V +-10% of nominal range max. 5 W / 8 VA 150 V CATII

Terminal connection capacity (supply voltage) Connectable conductors. Only one conductor can be connected per terminal!	
Single core, multi-core, fine-stranded	0.08 - 2.5 mm^2, AWG 28 - 12
Terminal pins, core end sheath	1.5 mm^2, AWG 16

16. 5 Protection class

Protection class II in accordance with IEC 60536 (VDE 0106, part 1), i.e. a ground wire connection is not required!

Protection against ingress of solid foreign bodies and water	IP20 in accordance with EN60529 September 2014, IEC60529:2013

16. 6 Digital inputs and outputs

Digital inputs	
(Pulse input S0)	
Maximum counter frequency	20 Hz
Switching input	
Input signal present	18 V to 28 V DC (typical 4 mA)
Input signal not present	0 to 5 V DC, current less than 0.5 mA
Response time (Jasic program)	200 ms
Cable length	up to 30 m unshielded, from 30 m shielded

Digital outputs 2 digital outputs; semiconductor relays, not short-circuit proof	
Switching voltage	max. 60 V DC, 30 V AC
Switching current	max. 50 mAeff AC/DC
Response time (Jasic program)	200 ms
Output of voltage dips	20 ms
Output of voltage exceedance events	20 ms
Switching frequency	max. 20 Hz
Cable length	up to 30 m unshielded; from 30 m shielded

Connectable conductors	
Single core, multi-core, fine-stranded	0.08 - 1.5 mm^2
Terminal pins, core end sheath	1 mm^2 Only one conductor can be connected per terminal!

16. 7 Temperature measurement input

Temperature measurement input	
Update time	approx. 200 ms
Connectable sensors	PT100, PT1000, KTY83, KTY84
Total burden (sensor + cable)	max. 4 kOhm
Cable length	up to 30 m unshielded, from 30 m shielded

Sensor type	Temperature range	Resistor range	Measurement uncertainty
KTY83	-55 °C to +175 °C	500 Ohm to 2.6 kOhm	± 1.5% rng[1)]
KTY84	-40 °C to +300 °C	350 Ohm to 2.6 kOhm	± 1.5% rng[1)]
PT100	-99 °C to +500 °C	60 Ohm to 180 Ohm	± 1.5% rng[1)]
PT1000	-99 °C to +500 °C	600 Ohm to 1.8 kOhm	± 1.5% rng[1)]

[1)] rng = metering range

Connectable conductors	
Single core, multi-core, fine-stranded	0.08 - 1.5mm^2
Terminal pins, core end sheath	1 mm^2 Only one conductor can be connected per terminal!

16. 8 Interfaces

RS232 interface	
Connection	5-pin screw-type terminals
Protocol	Modbus RTU/slave
Transmission rate	9.6 kbps, 19.2 kbps, 38.4 kbps, 57.6 kbps, 115.2 kbps

RS485 interface	
Connection	2-pin screw-type terminals
Protocol	Modbus RTU/slave, Modbus RTU/master
Transmission rate	9.6 kbps, 19.2 kbps, 38.4 kbps, 57.6 kbps, 115.2 kbps, 921.6 kbps

Profibus interface	
Connection	SUB D 9-pin
Protocol	Profibus DP/V0 per EN 50170
Transmission rate	9.6 kBaud to 12 MBaud

Ethernet interface	
Connection	RJ45
Function	Modbus gateway, embedded web server (HTTP)
Protocols	TCP/IP, EMAIL (SMTP), DHCP client (BootP), Modbus/TCP(port 502), ICMP (ping), NTP, TFTP, Modbus RTU over Ethernet (port 8000), FTP SNMP.

16. 9 Voltage measurement inputs

Three-phase 4-conductor systems (L-N/L-L)	max. 277 V / 480 V
Three-phase 3-conductor systems (L-L)	max. 480 V
Resolution	0.01 V
Crest factor	2 (related to 480 Vrms)
Overvoltage category	300 V CAT III
Measurement surge voltage	4 kV
Protection of voltage measurement	1 - 10 A
Impedance	4 MOhm / phase
Power consumption	approx. 0.1 VA
Sampling rate	20 kHz / phase
Transients	> 50 µs
Frequency of the fundamental oscillation	15 Hz to 440 Hz
- Resolution	0.001 Hz

16. 10 Current measurement inputs

Rated current	5 A
Rated current	6 A
Protection when measuring directly (without a current transformer)	6 A, char. B (approved i.a.w. UL/IEC)
Resolution on the display	10 mA
Crest factor	2 (related to 6 Amps)
Overvoltage category	300 V CAT III
Measurement surge voltage	4 kV
Power consumption	approx. 0.2 VA (Ri = 5 mOhm)
Overload for 1 sec.	100 A (sinusoidal)
Sampling rate	20 kHz

Terminal connection capacity (current measurement and voltage measurement) Connectable conductors. Only one conductor can be connected per terminal!	
Single core, multi-core, fine-stranded	0.08 - 4 mm^2, AWG 28 - 12
Terminal pins, core end sheath	2.5 mm^2, AWG 14

16. 11 Function parameters

16. 11. 1 Measurement in the frequency range 50/60 Hz

Measurement via current transformer ../5 A

Function	Symbol	Precision class	Metering range	Display range
Total active power	P	0.5[5] (IEC61557-12)	0 to 15.3kW	0 W to 9999 GW
Total reactive power	QA [6], Qv [6]	0.5[5] (IEC61557-12)	0 to 15.3 kvar	0 varh .. 9999 Gvar
Total apparent power	SA, Sv [6]	0.5[5] (IEC61557-12)	0 to 15.3 kVA	0 VA to 9999 GVA
Total active energy	Ea	0.5S[5] [7] (IEC61557-12)	0 to 15.3 kWh	0 Wh to 9999 GWh
Total reactive energy	ErA [6], ErV [6]	1[5] (IEC61557-12)	0 to 15.3 kvarh	0 varh .. 9999 Gvarh
Total apparent energy	EapA,EapV[6]	0.5[5] (IEC61557-12)	0 to 15.3 kVAh	0 VAh to 9999 GVAh
Frequency	f	0.05 (IEC61557-12)	40 to 70 Hz	40 Hz to 70 Hz
Phase current	I	0.25[8] (IEC61557-12)	0.001 to 8.5 Amps	0 A to 9999 kA
Measured neutral conductor current	IN	0.25[8] (IEC61557-12)	0.001 to 8.5 Amps	0 A to 9999 kA
Computed neutral conductor current	INc	1 (IEC61557-12)	0.001 to 25.5 A	0 A to 9999 kA
Voltage	U L-N	0.2 (IEC61557-12)	10 to 600 Vrms	0 V to 9999 kV
Voltage	U L-L	0.2 (IEC61557-12)	18 to 1000 Vrms	0 V to 9999 kV
Power factor	PFA, PFV	0.5 (IEC61557-12)	0.00 to 1.00	0 to 1
Short-term flicker, long-term flicker	Pst, Plt	Cl. A (IEC61000-4-15)	0.4 Pst to 10.0 Pst	0 to 10
Voltage dips	Udip	0.2 (IEC61557-12)	10 to 600 Vrms	0 V to 9999 kV
Voltage increases	Uswl	0.2 (IEC61557-12)	10 to 600 Vrms	0 V to 9999 kV
Transient overvoltages	Utr	0.2 (IEC61557-12)	10 to 600 Vrms	0 V to 9999 kV
Voltage interruptions	Uint	Duration +- 1 cycle	-	-
Voltage unbalance [1]	Unba	0.2 (IEC61557-12)	10 to 600 Vrms	0 V to 9999 kV
Voltage unbalance [2]	Unb	0.2 (IEC61557-12)	10 to 600 Vrms	0 V to 9999 kV
Voltage harmonics	Uh	Cl. 1 (IEC61000-4-7)	Up to 2.5 kHz	0 V to 9999 kV
THD of the voltage [3]	THDu	1.0 (IEC61557-12)	Up to 2.5 kHz	0% to 999 %
THD of the voltage [4]	THD-Ru	1.0 (IEC61557-12)	Up to 2.5 kHz	0% to 999 %
Current harmonics	Ih	Cl. 1 (IEC61000-4-7)	Up to 2.5 kHz	0 A to 9999 kA
THD of the current [3]	THDi	1.0 (IEC61557-12)	Up to 2.5 kHz	0% to 999 %
THD of the current [4]	THD-Ri	1.0 (IEC61557-12)	Up to 2.5 kHz	0% to 999 %
Mains signal voltage (interharmonics voltage)	MSV	IEC 61000-4-7 Class 1	10% – 200% of IEC 61000-2-4 class 3	0 V to 9999 kV

16. 11. 2 Measurement in the frequency range of 15 to 440 Hz

Measurement via current transformer ../5 A

Function	Symbol	Precision class	Metering range	Display range
Total active power	P	1[5] (IEC61557-12)	0 to 15.3kW	0 W to 9999 GW
Total reactive power	QA[6] , Qv[6]	1[5] (IEC61557-12)	0 to 15.3 kvar	0 varh .. 9999 Gvar
Total apparent power	SA, Sv[6]	1[5] (IEC61557-12)	0 to 15.3 kVA	0 VA to 9999 GVA
Total active energy	Ea	1[5] (IEC61557-12)	0 to 15.3 kWh	0 Wh to 9999 GWh
Total reactive energy	ErA[6], ErV[6]	2[5] (IEC61557-12)	0 to 15.3 kvarh	0 varh .. 9999 Gvarh
Total apparent energy	EapA, EapV[6]	1[5] (IEC61557-12)	0 to 15.3 kVAh	0 VAh to 9999 GVAh
Frequency	f	0.05(IEC61557-12)	15 to 440 Hz	15 Hz to 440 Hz
Phase current	I	0.5 (IEC61557-12)	0.001 to 8.5 Amps	0 A to 9999 kA
Measured neutral conductor current	IN	0.5 (IEC61557-12)	0.001 to 8.5 Amps	0 A to 9999 kA
Computed neutral conductor current	INc	1.5 (IEC61557-12)	0.001 to 25.5 A	0 A to 9999 kA
Voltage	U L-N	0.5 (IEC61557-12)	10 to 600 Vrms	0 V to 9999 kV
Voltage	U L-L	0.5 (IEC61557-12)	18 to 1000 Vrms	0 V to 9999 kV
Power factor	PFA, PFV	2 (IEC61557-12)	0.00 to 1.00	0 to 1
Short-term flicker, long-term flicker	Pst, Plt	-	-	-
Voltage dips	Udip	0.5 (IEC61557-12)	10 to 600 Vrms	0 V to 9999 kV
Voltage increases	Uswl	0.5 (IEC61557-12)	10 to 600 Vrms	0 V to 9999 kV
Transient overvoltages	Utr	0.5 (IEC61557-12)	10 to 600 Vrms	0 V to 9999 kV
Voltage interruptions	Uint	Duration +- 1 cycle	-	-
Voltage unbalance [1]	Unba	0.5 (IEC61557-12)	10 to 600 Vrms	0 V to 9999 kV
Voltage unbalance [2]	Unb	0.5 (IEC61557-12)	10 to 600 Vrms	0 V to 9999 kV
Voltage harmonics	Uh	Cl. 2 (IEC61000-4-7)	Up to 2.5 kHz	0 V to 9999 kV
THD of the voltage [3]	THDu	2.0 (IEC61557-12)	Up to 2.5 kHz	0% to 999 %

Declarations
1) In relation to the amplitude.
2) In relation to phase and amplitude.
3) In relation to fundamental oscillation.
4) In relation to effective value.
5) The precision class deteriorates by one level for measurements using a ../1A converter.
6) Calculation from fundamental oscillation.
7) Precision class 0.5S per IEC62053-22
8) In accordance with standard IEC61557-12

16. 12 Specifications per IEC 61000-4-30 class S

Characteristic		Uncertainty	Metering range
5.1	Frequency	± 50 mHz	42.5 Hz – 57.5 Hz, 51 Hz – 69 Hz
5.2	Supply voltage level	± 0.5% of Udin	20% – 120% of Udin
5.3	Flicker	± 5% of measured value	0.4 – 4.0 Pst
5.4	Drops and excessive increases	Amplitude: ± 1% of Udin Duration: ± 1 period	N/A
5.5	Voltage interruptions	Duration: ± 1 period	N/A
5.7	Unbalance	± 0,3%	1% – 5% u2 1% – 5% u0
5.8	Harmonics	IEC 61000-4-7 class 2	10% – 100% of IEC 61000-2-4 class 3
5.9	Interharmonics	IEC 61000-4-7 class 2	10% – 200% of IEC 61000-2-4 class 3
5.10	Mains signal voltage	In the range 3%-15% of Udin, ± 5% of Udin.	3% – 15% of Udin
5.12	Downward/upward deviation	± 0.5% of Udin	10% – 150% of Udin

The UMG 605-PRO meets the requirements according to IEC 61000-4-30 class S for:

- compensation
- time uncertainty
- marking concept
- transient influence quantities

17. Parameter list

Address	Designation	Setting range	Unit	Default
000	Current transformer, primary, L1 to L4	0 to 1000000	A	5
001	Current transformer, secondary, L1 to L4	1 to 5	A	5
002	Voltage transformer, primary, L1 to L4	0 to 1000000	V	400
003	Voltage transformer, secondary, L1 to L4	1 to 480	V	400
010	Current transformer, primary, L1	0 to 1000000	A	5
011	Current transformer, secondary, L1	1 to 5	A	5
012	Voltage transformer, primary, L1	0 to 1000000	V	400
013	Voltage transformer, secondary, L4	1 to 480	V	400

Table Parameter list for measurement settings

Address	Designation	Setting range	Unit	Default
100	Collect TFTP configuration file automatically 0 = deactivated x = file number	0 to 9999	-	0
101	TFTP error handling 0 = in the event of an error, the configuration menu is shown on the display. 1 = TFTP error handling in the device is deactivated	0 to 1	-	0
110	Measurement switch for baseline measurement (L1 to L3) 0=4w3m, 1=4w2m, 2=4w2u, 3=4w2i, 4=3w3m, 5=3w2m, 6=3w2u, 7=3w2i, 8=2w2m, 9=2w1m, 10=4w3mhv, 11=4w2uhv,12=3w2uhv, 13=3w2mhv	0 to 13	-	0
111	Measurement switch for supporting measurement (L4) 0=2w1n, 1=3w1m, 2=4w1m	0 to 2	-	0
112	Relevant voltage 0 = L-N, 1 = L-L	0 to 9	-	0
113	Deletes all active energy counters and S0 counters (1 = delete)	0 to 1	-	0
114	Deletes all reactive energy counters (1 = reset)	0 to 1	-	0
115	Resets all min. and max. values (1=delete)	0 to 1	-	0
116	Flicker filters 0 - 50 Hz / 230 V, 1 - 120 V / 50 Hz 2 - 230 V 60 Hz, 3 - 120 V/ 60 Hz	0 to 3	-	0

Table Parameter list for measurement settings

Address	Designation	Setting range	Unit	Default
200	Device address, Modbus/Profibus	1 to 255	-	1
201	Baud rate, RS232 0 = 9600Bit/s 1 = 19200Bit/s 2 = 38400Bit/s 3 = 57600Bit/s 4 =115200Bit/s	0 to 4	-	4
202	Baud rate, RS485 0 = 9600Bit/s 1 = 19200Bit/s 2 = 38400Bit/s 3 = 57600Bit/s 4 =115200Bit/s 5 = 921600Bit/s	0 to 5	-	4
203	RS485, mode 0 = Modbus RTU/slave 1 = Modbus RTU/master 2 = Gateway transparent 3,4 = internal use	0 to 6	-	0
204	RS232, mode 0 to 6 0 0 = Modbus RTU/slave 3 = Debug 6 = SLIP (for internal use only)	0 to 6	-	0

Table Parameter list for bus settings

Address	Designation	Setting range	Unit	Default
205	DHCP mode 0 = static IP 1 = BootP 2 = DHCP client 3 = Zeroconf	0 to 3	-	2
300	IP address, xxx --- --- ---	0 to 255	-	000
301	IP address, --- xxx --- ---	0 to 255	-	000
302	IP address, --- --- xxx ---	0 to 255	-	000
303	IP address, --- --- --- xxx	0 to 255	-	000
304	IP mask, xxx --- --- ---	0 to 255	-	000
305	IP mask, --- xxx --- ---	0 to 255	-	000
306	IP mask, --- --- xxx ---	0 to 255	-	000
307	IP mask, --- --- --- xxx	0 to 255	-	000
310	IP gateway, xxx --- --- ---	0 to 255	-	000
311	IP gateway, --- xxx --- ---	0 to 255	-	000
312	IP gateway, --- --- xxx ---	0 to 255	-	000
313	IP gateway, --- --- --- xxx	0 to 255	-	000

Table Parameter list for Ethernet settings

Address	Designation	Setting range	Unit	Default
400	Day	1 to 31	-	xx
401	Month	1 to 12	-	xx
402	Year	1 to 9999	-	xxxx
403	Hour	0 to 23	-	xx
404	Minute	0 to 59	-	xx
405	Second	0 to 59	-	xx
406	Copy date and time 1 = copy set data	0, 1	-	0
500	Device password	0 to 9999	-	xxxx
501	Homepage, password mode	0, 2, 128, 130	-	0
502	Homepage, password	0 to 9999	-	xxxx
510	Enabling “EMAX” option, licence part 1	0 to 9999	-	xxxx
511	Enabling “EMAX” option, licence part 2	0 to 9999	-	xxxx
520	Enabling “BACnet” option, licence part 1	0 to 9999	-	xxxx
521	Enabling “BACnet” option, licence part 2	0 to 9999	-	xxxx
600	LCD, contrast	0 to 99	-	50
601	LCD, backlight, max. brightness	0 to 16	-	10
602	LCD, backlight, min. brightness	0 to 8	-	3
603	LCD, backlight, time until switching from maximum to minimum brightness.	0 to 9999	s	60

Table Parameter list for other settings

18. Measured value indications

You can use buttons 1 and 2 on the display to display the following measured values in the factory default setting. The measured value designations used are abbreviated and have the following meanings:

- Active power = active power, consumption
- Reactive power= reactive power, inductive
- Active energy = active energy, consumption with backstop

Voltage L1-N	Voltage L2-N	Voltage L3-N	Voltage L4-N		
Voltage L1-L2	Voltage L2-L3	Voltage L3-L1			
Current L1	Current L2	Current L3	Current L4		
Active power L1	Active power L2	Active power L3	Active power L4	Active power L1 to L3	Active power L1 to L4
Reactive power L1	Reactive power L2	Reactive power L3	Reactive power L4	Reactive power L1 to L3	Reactive power L1 to L4
Active energy L1	Active energy L2	Active energy L3	Active energy L4	Active energy L1 to L3	Active energy L1 to L4
cos(phi) L1	cos(phi) L2	cos(phi) L3	cos(phi) L4	cos(phi) L1 to L3	
Frequency Rotation field	Thermistor input	Date	Time	Serial number	Firmware release

19. Dimension diagrams

19. 1 Front view

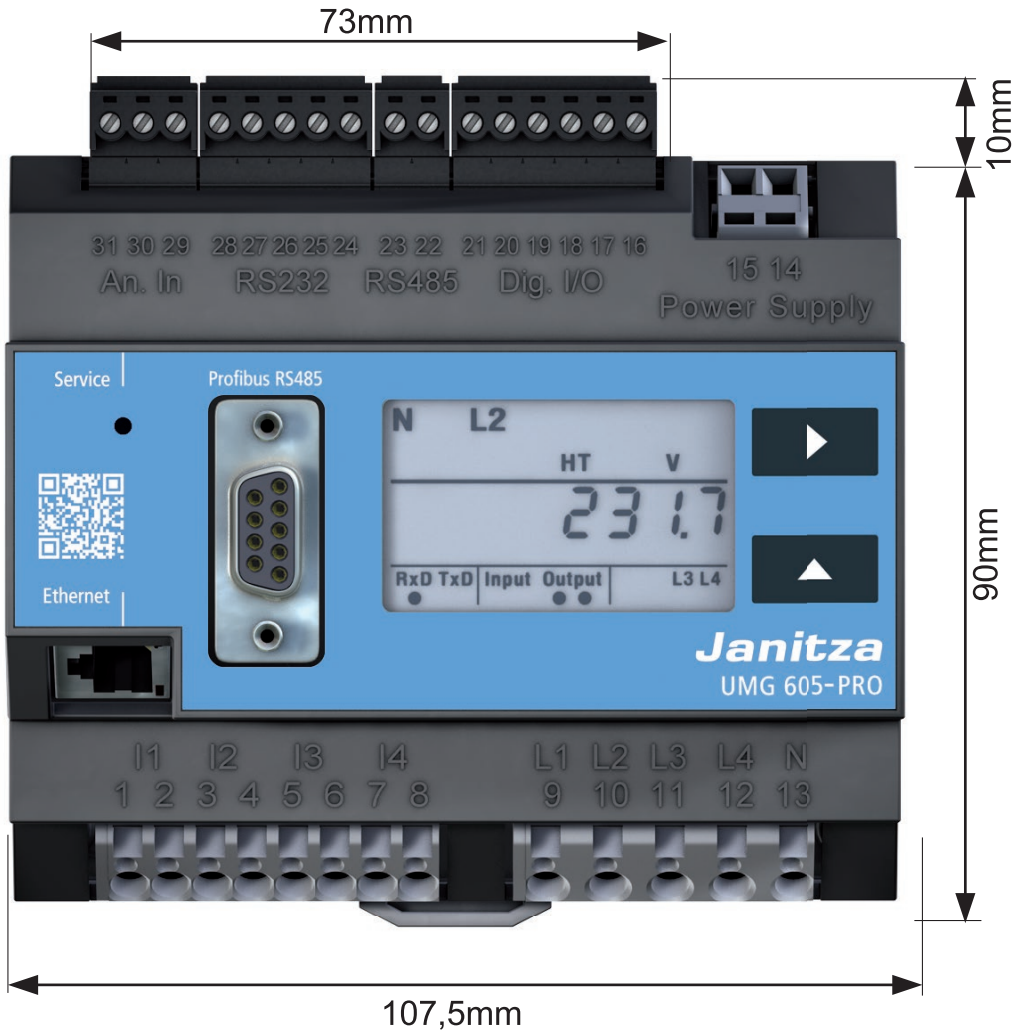

Fig. Front view of UMG 605-PRO with installation dimensions

19. 2 Side view

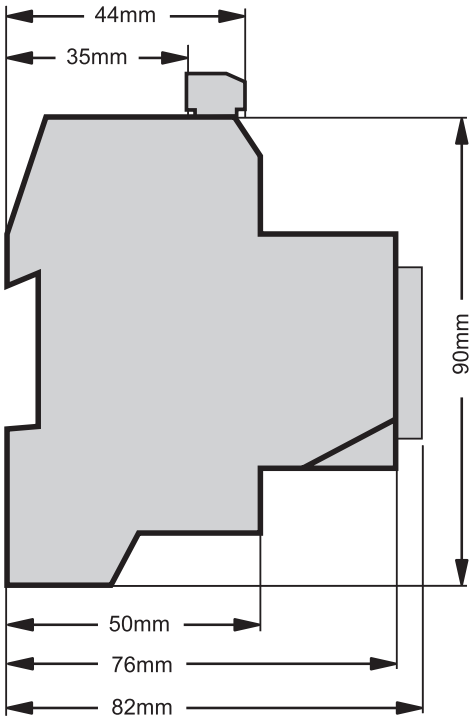

Fig. Schematic side view of UMG 605-PRO with installation dimensions

20. Connection example

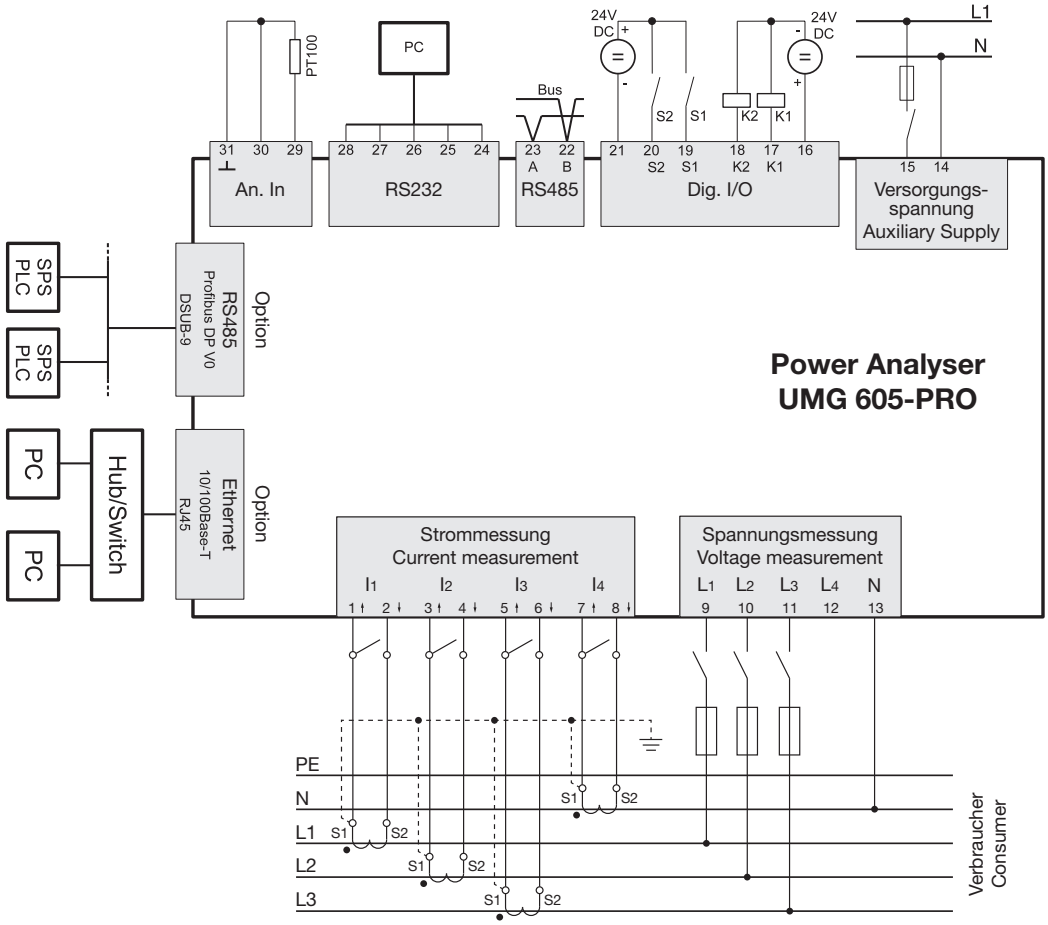

Fig. Connection example for UMG 605-PRO

21. Short introduction (setting primary current)

You have three identical current transformers with a current transformer ratio of 200 A / 5 A. You want to program the primary current of 200 A.
To do this, you must enter the value 200 for the primary current in address 000.
The secondary current is factory-set to 5 A in address 001.

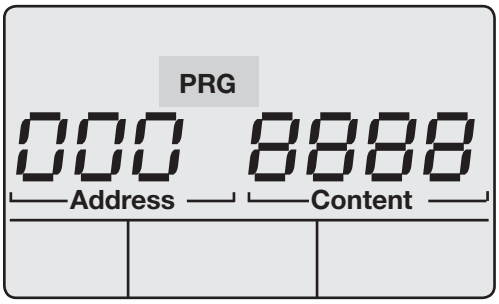

Fig. UMG 605-PRO display in programming mode

1. Switch to programming mode by pressing buttons 1 and 2 simultaneously for approximately one second.
   - The symbol for programming mode PRG appears.
   - The contents of address 000 are displayed.

2. Enter the primary current by using button 1 to select the number to be changed and button 2 to change the selected number.

Fig. UMG 605-PRO display in programming mode

3. Exit programming mode by pressing buttons 1 and 2 simultaneously again for approximately one second.
   - The current transformer setting is saved.
   - The device returns to display mode.